Memorandum

REISS ENGINEERING, INC.
1016 SPRING VILLAS PT.
WINTER SPRINGS, FLORIDA 32708
PHONE: (407) 679-5358
FAX: (407) 679-5003

To: **Robert Bolton, P.E., City of Vero Beach**
Stephen Utter, City of Vero Beach
John Kelly, City of Vero Beach

CC: **Sharon Bond, City of Vero Beach**

From: **Jim Hagerty, P.E., Reiss Engineering, Inc.**
Eric Knoppel, E.I., Reiss Engineering, Inc.

QAQC: **Mark Burgess, P.E., BCEE, Reiss Engineering, Inc.**
Glenn Dunkelberger, P.E., BCEE, Reiss Engineering, Inc.

Date: **May 9, 2019**

RE: **TECHNICAL MEMORANDUM – FINAL**
Nutrient Management Study – Phase II Evaluation
REI Job# 129006

This report is intended for review by the City of Vero Beach and other parties as considered necessary by the City of Vero Beach and Reiss Engineering, Inc. This report has been prepared under the supervision of James Hagerty, FL P.E. Lic. 43969.

James Hagerty, P.E.

05/09/2019

Date

EXECUTIVE SUMMARY

The main objective of this study was to evaluate treatment alternatives for the City of Vero Beach (City) Wastewater Treatment Plant (WWTP) to reduce the total nitrogen (TN) in the City's effluent to less than 9 mg/L, without constructing new tankage. Phase I of the study included data collection, preliminary process modeling of the existing treatment process, and screening of potential alternatives for modifications to the WWTP. After completion of Phase I, in a workshop with City staff, the following process alternatives were selected for more detailed analysis and cost estimation in Phase II: Alternative Two: Modified Ludzack-Ettinger (MLE), Alternative Three: Four-Stage Bardenpho, Alternative Five: Membrane Bioreactor (MBR), and Alternative Six: Integrated fixed film activated sludge (IFAS).

After completion of the conceptual designs and more detailed process modeling, REI determined that there was not enough volume within the existing tanks to perform a feasible conversion of the plant to a Four-Stage Bardenpho process, thus eliminating Alternative Three from further consideration. In addition, REI concluded that the process improvements provided by Alternative Six did not significantly reduce effluent TN concentrations enough compared to the expected lower-cost Alternative Two to continue with a full evaluation of Alternative Six.

In lieu of full development and cost estimation for Alternatives Three and Six, REI added two

alternatives based on discussions with the City that propose modifying the City's current plan to convert all existing reuse filters to cloth media disk filters. Instead, installing two (2) Denite® filters to treat a portion of the flow to very low TN concentrations and blending with the retrofitted cloth media filter effluent. The other option includes installing four (4) Denite® filters and eliminating the need for the existing reuse filters or the planned cloth media disk filters.

Conceptual designs were completed for the fully evaluated alternatives described above to understand the plant modifications that would be required for implementation. These alternative conceptual designs are included in **Appendix B** and were used as the basis for developing alternative cost estimates used in the 20-year net present worth analysis. The estimated 20-year NPW of each fully evaluated alternative is presented below:

- Alternative Two: MLE process = $6,754,250[1]
- Alternative Five: MBR process = $16,938,760[2]
- Alternative Seven: Denite® Filters (x2) = $8,334,770[1]
- Alternative Seven: Denite® Filters (x4) = $12,534,990[2]

[1]*The costs associated with renovating the existing reuse filters is not included in the 20-year NPW*
[2]*These alternatives do not require renovating the existing reuse filters at an estimated cost of $3.5 million*

The additional TN reduction from each fully evaluated alternative was used to determine the dollars per pound of additional TN reduced, where additional TN reduction can be described as the difference between the existing plant and proposed alternative effluent TN. Predicted effluent TN, additional TN reduction, and dollars per pound of additional TN reduced are presented in **Table ES-1** at permitted flow (4.5 MGD) and in **Table ES-2** at current average flow (3.5 MGD).

Table ES-1: Summary of Additional TN Reduction at Permitted Flow of 4.5 MGD

Alternative	Effluent TN		Addt'l TN Reduction		$/lbs. Addt'l TN Reduced
	mg/L	lbs./year	mg/L	lbs./year	
Existing	*20.0*	*274,000*	*NA*	*NA*	*NA*
MLE	8.8	120,550	11.2	153,450	$44.00
MBR	4.2	57,540	15.8	216,460	$78.25
Denite (x2)	9.0	123,290	11.0	150,710	$55.50
Denite (x4)	3.0	41,100	17.0	232,900	$54.00

Table ES-2: Summary of Additional TN Reduction at Current Average Flow of 3.5 MGD

Alternative	Effluent TN		Addt'l TN Reduction		$/lbs. Addt'l TN Reduced
	mg/L	lbs./year	mg/L	lbs./year	
Existing	*16.0*	*170,500*	*NA*	*NA*	*NA*
MLE	7.8	83,110	8.2	87,390	$77.50
MBR	4.1	43,690	11.9	126,810	$133.75
Denite (x2)	8.9	94,830	7.1	75,670	$110.25
Denite (x4)	3.0	31,970	13.0	138,530	$90.50

Based on constructability, cost, operational flexibility, and ability to meet a range of effluent TN concentrations, REI recommends Alternative Seven with four (4) Denite® filters.

1.0 INTRODUCTION

The City of Vero Beach (City) Wastewater Treatment Plant (WWTP) is a secondary treatment plant permitted to treat 4.5 million gallons per day (MGD) annual average day flow (ADF) and a three-month average daily flow (TMADF) of 5.44 MGD. The existing WWTP process includes influent screening, grit removal, biological nutrient removal, secondary clarification, filtration, chlorine disinfection, sludge dewatering, and effluent disposal. Effluent disposal is via a 9.72 MGD deep injection well when the resource is not beneficially reused in the City's public access reuse (PAR) system. A site plan of the existing plant is shown on **Figure B-1** in **Appendix B**.

The main objective of this study was to evaluate nutrient removal alternatives to reduce the total nitrogen (TN) in the City's effluent without constructing new tankage. Options to reduce total nutrients included modifying standard operating procedures (SOPs), repurposing the abandoned sludge digestor, modifying existing structures, and evaluating new treatment processes and technologies for the existing biological treatment system.

The treatment objectives established for this study were developed to consider future regulatory limitations on effluent nutrient limits. The main effluent parameter of concern is TN which is described as the sum of nitrate-nitrite and total kjeldahl nitrogen (TKN), where TKN is the sum of ammonia and organic nitrogen. The targeted effluent concentrations are provided in **Table 1**. These limits will be used as the basis of design for all nutrient reduction alternatives.

Table 1. Targeted Effluent Concentrations

Parameter	Effluent Target
Total Carbonaceous BOD	< 5 mg/L
Total Suspended Solids	< 5 mg/L
Total Nitrogen	< 9 mg/L
Total Phosphorus	< 3 mg/L

1.1 Phase I Review

The City of Vero Beach WWTP Nutrient Management Study was scoped and budgeted to be executed in two phases. The Phase I scope of services was completed by Reiss Engineering, Inc. (REI) and accomplished the following objectives:

- Identified influent loading characteristics
- Identified existing plant operational flexibility and constraints
- Developed and calibrated a process model under existing operational conditions
- Presented a list of possible nutrient reduction alternatives

Alternatives were evaluated to provide the City options that could increase nutrient removal without additional tankage. The following six alternatives were presented to the City on September 14, 2018 in a collaborative workshop:

- Alternative One: MLE process utilizing additional volume from Sludge Tank No. 1
- Alternative Two: MLE process utilizing additional volume from Sludge Tank No. 1 and Sludge Tank No. 2.
- Alternative Three: Four-Stage Bardenpho process utilizing additional volume from Sludge Tank No. 1 and Sludge Tank No. 2.

- Alternative Four: MLE process utilizing additional volume from Sludge Tank No. 1 and replacing a portion of the existing reuse filters with denitrification filters.
- Alternative Five: MLE process with a Membrane Bioreactor (MBR) system utilizing additional volume from Sludge Tank No. 1.
- Alternative Six: MLE process utilizing additional volume from Sludge Tank No. 1 and implementing a) IFAS or b) aerobic granular sludge technology.

It was agreed between the City and REI that alternatives three, five, and six were to be selected for further evaluation in this Phase II portion of the study, with alternative two as the "base" condition. Since all three selected alternatives involve converting the existing process to an MLE process, it was proposed by the City that the selected alternatives could be implemented in phases, if selected. REI agreed with the City's approach as it allows the City the choice to add the second anoxic/reaeration zone, MBR system, or IFAS system in the future if nutrient limits are not being met.

One other alternative, involving a single-stage aeration process with denitrification filters, was evaluated in addition to the alternatives mentioned above. This alternative (Alternative Seven) would utilize the entire volume of the existing process basin as an aeration stage for cBOD and ammonia removal (nitrification). Denitrification filters would replace a portion of the existing reuse filters and the effluent would be blended with the existing reuse filter effluent to achieve the City's TN effluent target.

1.1.1 Existing Nutrient Removal Treatment and Performance

Currently, biological treatment (nutrient removal) is achieved at the Vero Beach WWTP by a conventional activated sludge process. This method of treatment involves three components: the aeration basins, secondary clarifiers, and a return activated sludge (RAS) pumping system. There are currently two (2) aeration basins, each with a volume of approximately 404,000 gallons at a side water depth of 15 feet. Influent flow is split between the two aeration basins and enters through the outer perimeter of the basins. Flow is discharged at the opposite end via a common discharge channel where the mixed liquor flows by gravity to the secondary clarifiers. RAS is returned to the influent wet well while the waste activated sludge (WAS) is sent to the CleanB® Chlorine Dioxide treatment system. A flow diagram of the existing biological treatment process is shown on **Figure B-2** in **Appendix B**.

The existing treatment process is capable of meeting current permit limits but fails to meet the City's targeted TN goal of less than 9.0 mg/L. The data evaluation conducted in Phase I showed that at an average influent flow of 3.5 MGD, the average effluent TN concentration was 16 mg/L. The calibrated process model of the existing plant was run at the permitted ADF of 4.5 MGD and estimated an effluent TN concentration of about 20 mg/L. Additionally, Phase I determined that an influent TKN concentration of 43 mg/L would be used as the basis of design for influent loadings. **Table 2** summarizes the current TN reduction performance at the plant.

Table 2. Existing Plant TN Reduction Performance

Influent Flow	Influent TKN		Effluent TN		Plant TN Reduction	
	mg/L	lbs./year	mg/L	lbs./year	mg/L	lbs./year
4.5 MGD	43	589,040	20	274,000	23	315,040
3.5 MGD	43	458,140	16	170,500	27	287,640

1.1.2 Available Tankage

Phase I of this study concluded that four (4) tanks are available for increasing nutrient removal capacity. The existing process basin structure consists of three separate tanks: Aeration Basin No. 1, Aeration Basin No. 2, and Sludge Tank No. 1. Each tank is separated by interior walls which can be knocked out for expansion or left as-is. In January 2018, the City began start-up of its CleanB® Chlorine Dioxide WAS treatment system and has allowed Sludge Tank No. 1 to become available. Sludge Tank No. 2, which is an out-of-service aerobic digester, is also available onsite for additional treatment volume. Geometric properties for each of these available tanks is described in **Table 3**.

Table 3. Available Tankage Geometric Properties

Tank	Dimensions	Side Water Depth	Volume (Gallons)
Aeration Basin No. 1	90’ × 40’	15’	404,000
Aeration Basin No. 2	90’ × 40’	15’	404,000
Sludge Tank No. 1	90’ × 50’	15’	505,000
Sludge Tank No. 2	75’ Diameter	18’	595,000

2.0 ADDITIONAL DATA COLLECTION

The process model developed in Phase I of this study assumed that the aeration basins were operating at a dissolved oxygen (DO) concentration of 1.0 mg/L. This assumption was based on the lack of nitrification occurring within the system. According to Ten State Standards 92.331, aeration equipment shall be capable of maintaining a minimum dissolved oxygen concentration of 2.0 mg/L in the mixed liquor. To confirm or deny the assumption made in Phase I, REI performed DO sampling within the aeration basins on February 5, 2019. **Figure B-3** in **Appendix B** shows the results of the DO sampling and **Table 4** summarizes average DO concentrations within the two aeration basins. It should be noted that at the time of the sampling, the plant was operating two (2) blowers at roughly 4,000 standard cubic feet per minute (scfm) at an average wastewater temperature of 24.4 °C.

Table 4. Average DO Concentration in Aeration Basins

Depth Below Water Surface	Aeration Basin No. 1 (East Basin)	Aeration Basin No. 2 (West Basin)
3 Feet	1.1 mg/L	0.8 mg/L
6 Feet	0.9 mg/L	0.8 mg/L
9 Feet	0.9 mg/L	0.6 mg/L
12 Feet	0.7 mg/L	0.4 mg/L
Tank Average	**0.9 mg/L**	**0.6 mg/L**

The sampling confirmed that insufficient mixing and/or poor oxygen transfer efficiency are the most probable causes of the low DO readings. These low DO concentrations are inhibiting full nitrification and promoting denitrification within dead zones. This phenomenon could explain the high ammonia concentration in the City’s effluent.

3.0 PROCESS MODELING OF ALTERNATIVES

The purpose of this section is to provide process overviews, design considerations, process model configurations, and effluent quality predictions of each proposed alternative. To estimate the performance of each alternative, process models were developed using BioWin® by EnviroSim, Inc. Default kinetic and stoichiometric parameters were used for modeling each alternative, which are provided by the software and based on industry standard values.

All process models developed for this study were based on the 85th percentile influent concentrations, which were addressed in Phase I, at the average operating flow of 3.5 MGD and at the plant's permitted ADF of 4.5 MGD. **Table 5** presents the influent design concentrations used in developing the process models.

Table 5. Influent Design Concentrations

Parameter	Influent Value
Total Carbonaceous BOD	205 mg/L
Volatile Suspended Solids[1]	140 mg/L
Total Suspended Solids	175 mg/L
Total Kjeldahl Nitrogen	43 mg/L
Total Phosphorus	7 mg/L
Nitrate	0 mg/L
Alkalinity (as $CaCO_3$)	205 mg/L

[1] *Volatile suspended solids concentration was assumed to be 80 percent of influent total suspended solids.*

3.1 Alternative Two: MLE Process Model

A "base" model of the MLE process was developed to determine the limits of the treatment capacity based on available tankage. The MLE process is a two-stage process consisting of a first anoxic zone followed by an aerobic zone, with an internal recycle (IR) of mixed liquor from the aerobic stage to the anoxic stage. This internal recycle stream allows for increased denitrification rates and overall nitrogen removal by recirculating nitrates (NO_3) not removed in the aerobic stage back to the anoxic stage. Varying the internal recycle ratio allows for greater control over the fraction of nitrate removed but is limited based on capacity of the anoxic stage. A schematic diagram of the MLE process model is shown on **Figure 1**.

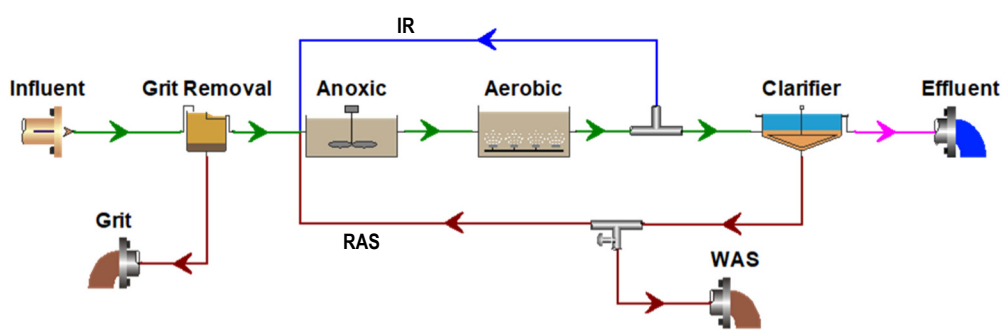

Figure 1. MLE Process Model Schematic Diagram

The objective of utilizing a "base" model was to provide the option to implement one of the proposed alternatives in the future if nutrient limits are not being met or become more stringent. Since all proposed alternatives involve converting the existing treatment process to an MLE process, this base model will help identify any volumetric constraints in the system.

The base model was calibrated to achieve a mixed liquor suspended solids (MLSS) concentration within typical operating ranges between 3,000 to 4,000 mg/L. All models were run at a temperature of 20°C with an aerobic zone DO of 2.0 mg/L, unless otherwise noted. Using the model's Control SRT function, the solids retention time (SRT) was set for each model run. A Control SRT function allows BioWin® to control the wastage rate in order to achieve the desired SRT. For BioWin® to determine the wastage rate, elements contributing to the system's total mass and wastage elements must be specified. The base model's total mass included solids in the biological reactors and the wastage elements included WAS and plant effluent. Clarifier solids were assumed to be negligible for the system's total mass.

In order to achieve a typical MLSS concentration within the aeration basin, the entire volume of the existing process structure (Aeration Basin No. 1, Aeration Basin No. 2, and Sludge Tank No. 1) had to be utilized. Anoxic volume was provided by the out-of-service Sludge Tank No. 2.

Basis of design parameters and model results are presented in **Table 6** and **Table 7**, respectively.

Table 6. MLE Process Model Basis of Design Parameters

Parameter	Run No. 1 Inputs	Run No. 2 Inputs
Flow	4.5 MGD	3.5 MGD
Aerobic Reactor (x1) Volume Depth	 1.3 MG 15 ft.	 1.3 MG 15 ft.
Anoxic Reactor (x1) Volume Depth	 0.6 MG 15 ft.	 0.6 MG 15 ft.
System SRT	8 Days	12 Days
Internal Recycle	13.5 MGD ($3Q_{inf}$)	14.0 MGD ($4Q_{inf}$)
Clarifier Underflow	1.80 MGD ($0.4Q_{inf}$)	1.80 MGD ($0.4Q_{inf}$)

Table 7. MLE Process Model Results

Parameter	Run No. 1 Results	Run No. 2 Results
Aerobic MLSS	3,800 mg/L	4,100 mg/L
RAS	1.73 MGD	1.36 MGD
WAS	0.07 MGD	0.04 MGD
Effluent cBOD	2.1 mg/L	1.9 mg/L
Effluent TSS	3.2 mg/L	3.5 mg/L
Effluent TN	**8.8 mg/L**	**7.8 mg/L**
Effluent TP	2.9 mg/L	3.2 mg/L

3.2 Alternative Three: Four-Stage Bardenpho Process Model

A Four-Stage Bardenpho (Four-Stage) process builds on the MLE process, with the first two stages being identical to the MLE process. The third stage, in the Four-Stage process, is a secondary anoxic stage that provides additional denitrification to the portion of flow that is not recycled back to the first anoxic stage. The fourth zone is a reaeration zone which serves to strip any remaining nitrogen gas (N_2), nitrifies additional ammonia (NH_4) released from the second anoxic stage, and increases the dissolved oxygen (DO) concentration before clarification to minimize phosphorus release. A schematic diagram of the Four-Stage process model is shown on **Figure 2**.

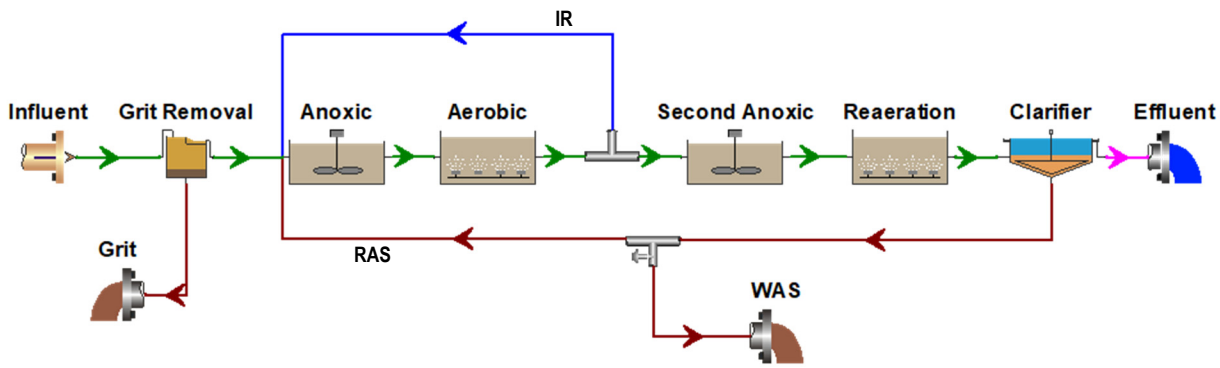

Figure 2. Four-Stage Process Model Schematic Diagram

From the development of the "Base" MLE process model, it was discovered that all available tankage will be used in the MLE process. Due to insufficient volume, the Four-Stage system was eliminated from further consideration as an alternative to meet the City's effluent goals. For the Four-Stage system to perform effectively, additional treatment volume (new tankage) would be required for second anoxic and reaeration basins.

3.3 Alternative Five: Membrane Bioreactor Process Model

MBR systems utilize both suspended-growth activated sludge (biological treatment) and membrane filtration (physical treatment) to perform the solids-liquid separation process that is accomplished by secondary clarifiers. Membranes are submerged in the final aeration tank of the biological treatment process and are in direct contact with the mixed liquor. Vacuum pressure is applied to a header pipe connected to the membranes to draw the treated effluent through the hollow fiber membranes and into the effluent pumps. The external surface of the membrane is continuously scoured using airflow introduced at the bottom of the membrane module. MBR systems are known as a compact technology that can produce high quality effluent suitable for reuse. The process also allows for a higher biomass concentration to be maintained which reduces the required treatment volume. MBR systems often result in higher operation and maintenance costs due to increased oxygen demands and energy associated with pumping, backwashing, and cleaning of the membrane modules. A schematic diagram of the MBR process model is shown on **Figure 3**.

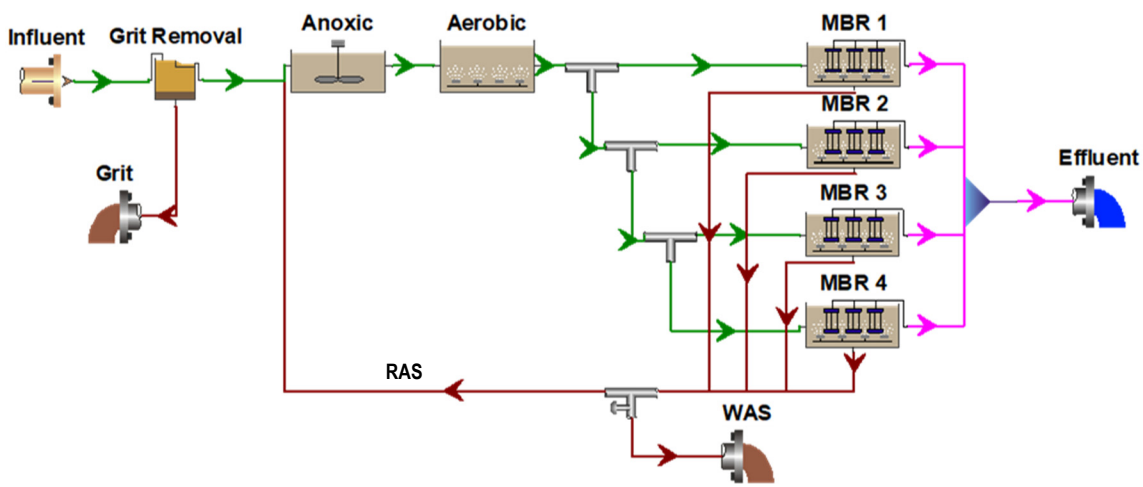

Figure 3. MBR Process Model Schematic

For this alternative Kubota Membrane USA Corporation proposed four (4) MBR basins with twelve (12) SP600 Submerged Membrane Units per basin (48 units total). Each membrane unit has a surface area of 6,458 square feet with a displaced volume of 307 cubic feet. Basis of design parameters and process model results are presented in **Table 8** and **Table 9**, respectively.

Table 8. MBR Process Model Basis of Design Parameters

Parameter	Run No. 1 Inputs	Run. No. 2 Inputs
Flow	4.5 MGD	3.5 MGD
Anoxic Reactor (x1) Volume Depth	 0.38 MG 14 ft.	 0.38 MG 14 ft.
Aerobic Reactor (x1) Volume Depth	 0. 35 MG 13 ft.	 0.35 MG 13 ft.
MBR Reactor (x4) Volume Depth	 0.12 MG 15 ft.	 0.12 MG 15 ft.
System SRT	12 Days	18 Days

Table 9. MBR Process Model Results

Parameter	Run No. 1 Results	Run No. 2 Results
MBR Tank MLSS	9,050 mg/L	9,000 mg/L
RAS	17.60 MGD	13.73 MGD
WAS	0.08 MGD	0.05 MGD
Effluent cBOD	1.3 mg/L	0.8 mg/L
Effluent TSS	0.0 mg/L	0.0 mg/L
Effluent TN	**4.2 mg/L**	**4.1 mg/L**
Effluent TP	0.5 mg/L	2.5 mg/L

3.4 Alternative Six: Integrated Fixed-Film Activated Sludge Process Model

IFAS systems incorporate a fixed-film component within an activated sludge basin. These fixed-film components are known as biofilm media, or carriers, and provide additional surface area for biomass to grow. Three common biofilm medias include fixed-bed media, free-floating plastic media, or sponge-type carriers. These fixed or free-floating carriers encourage the growth of biomass and enhance the treatment capacity of the existing system. IFAS systems are implemented to expand the capacity of the activated sludge system while utilizing existing tankage. The attached biomass combined with the suspended biomass allows for a much larger biomass population within the same reactor volume. A major benefit of IFAS systems is the increased MLSS without higher solids loading on the secondary clarifiers. These systems have been proven to enhance BOD removal and nitrification rates above the limits that can be achieved under a conventional suspended-growth reactor of the same volume. A schematic diagram of the IFAS process model is shown on **Figure 4**.

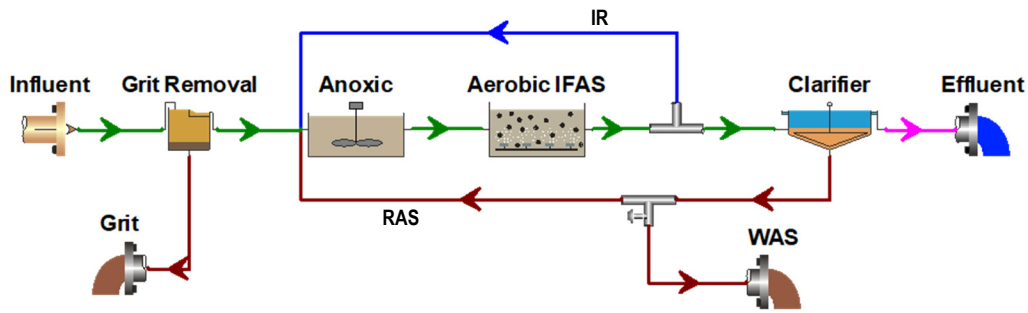

Figure 4. IFAS Process Model Schematic Diagram

The development of the IFAS process model utilized typical values of K1 media from WEF MOP 8 and assumed the aeration basins were 60 percent filled with media. Basis of design parameters and model results are presented in **Table 10** and **Table 11**, respectively.

Table 10. IFAS Process Model Basis of Design Parameters

Parameter	Run No. 1 Inputs	Run No. 2 Inputs
Flow	4.5 MGD	3.5 MGD
Anoxic Reactor (x1) Volume Depth	 0.6 MG 15 ft.	 0.6 MG 15 ft.
Aerobic Reactor (x1) Volume Depth	 1.3 MG 15 ft.	 1.3 MG 15 ft.
System SRT	10 Days	12 Days
Internal Recycle	18.0 MGD ($4Q_{inf}$)	13.5 MGD ($3Q_{inf}$)
Clarifier Underflow	1.80 MGD ($0.4Q_{inf}$)	1.80 MGD ($0.4Q_{inf}$)
Media Specific Area[1]	152.4 sf./cf.	152.4 sf./cf.
Media Specific Volume[1]	0.15 cf./cf.	0.15 cf./cf.

[1] *Typical Values of K1 Media, WEF MOP 8*

Table 11. IFAS Process Model Results

Parameter	Run No. 1 Results	Run No. 2 Results
Aeration MLSS (Bulk)	4,000 mg/L	3,500 mg/L
RAS	1.74 MGD	1.35 MGD
WAS	0.06 MGD	0.05 MGD
Effluent cBOD	2.3 mg/L	2.0 mg/L
Effluent TSS	3.4 mg/L	3.0 mg/L
Effluent TN	**8.0 mg/L**	**8.0 mg/L**
Effluent TP	2.9 mg/L	3.0 mg/L

3.5 Summary of Modeled Alternatives

BioWin® process models were developed for the MLE process (Alternative Two), MBR process (Alternative Five), and IFAS process (Alternative Six). After development of the Alternative Two MLE process model, all available tankage volume was required for the process to meet City effluent targets. Due insufficient volume, Alternative Four (4-Stage Bardenpho process) was eliminated from further modeling and evaluation. For the Four-Stage Bardenpho process to perform effectively, additional volume would be required for the second anoxic and reaeration basins.

REI concluded that the IFAS process model results did not yield significant enough TN reduction, compared to the MLE process, to continue further evaluation. From a cost-benefit perspective, the IFAS process was eliminated as an alternative due to the additional costs that would be associated with this process over the "Base" MLE process.

A summary table of the predicted effluent TN concentrations from each of the developed process models is presented in **Table 12**.

Table 12. Summary of Effluent TN Predictions from Modeled Alternatives

Alternative	Projected Effluent TN at 4.5 MGD		Projected Effluent TN at 3.5 MGD	
	mg/L	lbs./year	mg/L	lbs./year
MLE Process	8.8	120,550	7.8	83,110
MBR Process	4.2	57,540	4.1	43,690
IFAS Process[1]	8.0	109,590	8.0	85,240

[1] *Eliminated from further evaluation*

4.0 ALTERNATIVES ANALYSIS

The purpose of this section is to evaluate the required modifications, economic considerations, and other potential impacts associated with each alternative. Conceptual site layouts, material quantity estimates (i.e. piping, equipment, modifications, etc.), cost to construct/install major equipment, and operation and maintenance (O&M) costs are discussed in the following sections. A qualitative assessment of the indirect and non-cost impacts such as impacts to current operations during construction, potential for noise and odors during/after construction, regulatory acceptance, and water quality benefits to PAR customers were also considered.

Cost estimates were based on the estimated level of effort and construction sequencing that will be required to maintain plant operations during construction. Cost associated with electrical, instrumentation, and control systems were estimated based on a percentage of the total construction costs; the City and REI agreed that 25% would be assumed. The associated increase and/or reduction in O&M, power, chemical, biosolids disposal, and/or labor costs for each alternative were evaluated under a 20-year net present worth (NPW) analysis. Repair and replacement (R&R) costs were assumed to be 3% of the total equipment cost. The NPW analysis was only applied to added costs associated with each alternative and does not represent present worth costs for the full treatment plant. A list of key financial assumptions used for this study and in the City's Master Plan update can be found in **Appendix A**.

Annual TN mass reduction was determined for each alternative by comparing the existing plant effluent TN loadings with the proposed alternative effluent TN loadings. Additional TN reduction provided by each alternative was then determined. Based on the effluent TN predictions determined by the BioWin® process models, annual TN reduction was multiplied over 20 years to derive a 20-year NPW cost per pound of additional TN reduced.

4.1 Alternative Two: MLE Process Evaluation

This alternative proposes to modify and expand the existing aeration process basin to a two-stage conventional MLE process. The new MLE process will require additional treatment volume that will be provided by re-purposing Sludge Tank No. 1 and Sludge Tank No. 2. The proposed modifications for this alternative are listed below:

- Convert Sludge Tank No. 1 to Aeration Basin No. 3
- Convert Sludge Tank No. 2 to Anoxic Tank No. 1
- Install new influent piping from grit effluent channel to Anoxic Basin No. 1
- Install new anoxic mixers in Anoxic Basin No. 1
- Install new effluent weir box in Anoxic Basin No. 1
- Construct new effluent channel on North end of Aeration Basin No. 3
- Tie Aeration Basin No. 3 effluent channel into existing influent channels
- Install new fine bubble aeration system in all three (3) aeration basins
- Replace all existing slide gates
- Construct IR pump platform on south end of existing aeration basins
- Install four (4) IR pumps, two (2) per basin
- Install new IR piping from IR pumps to Anoxic Basin No. 1

The proposed conceptual site layout (**Figure B-4**) and process flow diagram (**Figure B-5**) for Alternative Two are presented in **Appendix B**.

4.1.1 Alternative Two: MLE Process Additional TN Reduction

Effluent quality predictions from the developed BioWin® process model resulted in a TN effluent concentration of 8.8 mg/L at 4.5 MGD (120,550 lbs./year) and 7.8 mg/L at 3.5 MGD (83,110 lbs./year). Additional effluent TN reduction achieved by the MLE process is **153,450 lbs./year** at 4.5 MGD and **87,390 lbs./year** at 3.5 MGD when compared to current process performance.

4.1.2 Alternative Two: MLE Process Cost Estimate

The estimated capital cost breakdown for Alternative Two is presented in **Table 13** below.

Table 13. Alternative Two: MLE Process Capital Cost Estimate

Item No.	Item	Quantity	Units	Unit Cost	Cost
	Piping				
1	42" DI Influent Piping	430	LF	$ 1,350	$ 580,500
2	36" DI IR Piping	255	LF	$ 1,250	$ 318,750
3	30" DI Influent Piping	180	LF	$ 925	$ 166,500
4	16" DI IR Piping (x4)	80	LF	$ 375	$ 30,000
	Equipment				
6	IR Pumps	4	EA	$ 55,000	$ 220,000
7	Anoxic Mixers	2	EA	$ 45,000	$ 90,000
8	Fine Bubble Aeration System	3	EA	$ 95,000	$ 285,000
9	Process Control System	1	LS	$ 125,000	$ 125,000
10	Control, Isolation Vales and Slide Gates	1	LS	$ 100,000	$ 100,000
	Modifications				
11	Anoxic Mixer Platform Rehab	2	EA	$ 30,000	$ 60,000
12	Digester No. 2 Demolition	1	LS	$ 50,000	$ 50,000
13	Digester No. 1 Demolition	1	LS	$ 15,000	$ 15,000
14	Anoxic Tank Structural Modifications	1	LS	$ 90,000	$ 90,000
15	Anoxic Effluent Box w/ Weir	1	LS	$ 15,000	$ 15,000
16	Concrete	12	CY	$ 1,000	$ 12,000
17	Concrete Demo	1	LS	$ 5,000	$ 5,000
18	IR Pump Platform (16' x 5')	2	EA	$ 25,000	$ 50,000
	Miscellaneous				
19	Maintenance of Flow	1	LS	$ 50,000	$ 50,000
20	Electrical and Instrumentation (25%)	1	LS	$ 565,690	$ 565,690
21	Miscellaneous Costs (15%)	1	LS	$ 339,420	$ 339,420
				Subtotal Construction Cost	**$ 3,167,860**
22	Construction Contingency (30%)	1	LS	$ 950,360	$ 950,360
23	Engineering and Administration (20%)	1	LS	$ 633,580	$ 633,580
				Total Project Cost	**$ 4,751,800**

O&M costs include anoxic mixing power, IR pumping power, and manpower. The estimated yearly operating cost is roughly $110,000 with an annualized equipment R&R cost of $24,600. At an assumed interest rate of 3%, the average annual operational cost has a 20-year NPW of $2,002,450. A cost summary table for Alternative Two is presented in **Table 14**.

Table 14. Summary of Costs for Alternative Two: MLE Process

Estimated Costs	Cost
Capital Cost	$4,751,800
Average Annual Operational Cost	$134,600
20-Year NPW	$6,754,250

4.2 Alternative Three: Four-Stage Bardenpho Evaluation

This alternative proposed to modify and expand the existing aeration process basin to a four-stage first anoxic, aerobic, second anoxic, and reaeration process. Due to the "Base" MLE process utilizing all available volume, this alternative was eliminated from further evaluation. To consider the Four-Stage alternative, additional tankage would need to be constructed to provide more treatment volume.

4.3 Alternative Five: Membrane Bioreactor System Evaluation

This alternative proposes to modify and expand the existing process basins to an MBR process. The new MBR system will require additional treatment volume that will be provided by re-purposing Sludge Tank No. 1. The proposed modifications for this alternative are listed below:

- Convert Aeration Basin No. 1 to Anoxic Basin No. 1
- Convert Sludge Tank No. 1 to four (4) MBR tanks
- Convert existing clarifiers to EQ Basin No. 1 and EQ Basin No. 2
- Install new fine bubble aeration system in all aeration, MBR, and EQ Basins
- Install new EQ and anoxic basin mixers
- Install EQ basin odor control system with tank covers
- Construct new center wall along entire process basin for two (2) treatment trains
- Construct separation walls for each MBR tank
- Install MBR modules and equipment
- Install membrane chemical cleaning system
- Install new influent piping from grit effluent channel and tie into clarifier influent piping
- Install new EQ bypass piping
- Install new emergency overflow interconnect piping between the two (2) EQ basins
- Construct new EQ storage transfer pump station
- Install new EQ storage transfer pump station effluent piping
- Construct two (2) elevated platforms on East side of process basin for fine screens
- Install two (2) out-of-channel fine screens
- Modify existing basin walls to allow flow into each basin
- Construct concrete tops on portion of MBR tanks
- Install and construct bridge crane and associated equipment
- Install new permeate piping
- Modify existing machinery room for permeate pumping system
- Install new permeate effluent piping and tie into existing CCC influent piping

The proposed conceptual site layout (**Figure B-6**) and process flow diagram (**Figure B-7**) for Alternative Five is presented in **Appendix B**.

4.3.1 Alternative Five: MBR Process Effluent TN Reduction

Effluent quality predictions from the developed BioWin® process model result in a TN effluent concentration of 4.2 mg/L at 4.5 MGD (57,540 lbs./year) and 4.1 mg/L at 3.5 MGD (43,690 lbs./year). Additional effluent TN reduction achieved by the MBR process is **216,460 lbs./year** at 4.5 MGD and **126,810 lbs./year** at 3.5 MGD when compared to current process performance.

4.3.2 Alternative Five: MBR Process Cost Estimate

The estimated capital cost breakdown for Alternative Five is presented in **Table 15** below.

Table 15. Alternative Five: MBR Process Capital Cost Estimate

Item No.	Item	Quantity	Units	Unit Cost	Cost
	Piping				
1	30" EQ Piping	390	LF	$ 925	$ 360,750
2	24" EQ Overflow Piping	40	LF	$ 605	$ 24,200
3	24" MBR Effluent Piping	125	LF	$ 605	$ 75,625
4	24" Permeate Effluent Piping	280	LF	$ 605	$ 169,400
5	16" EA Effluent	20	LF	$ 375	$ 7,500
6	16" RAS Piping	50	LF	$ 375	$ 18,750
7	EQ Effluent Manhole	1	EA	$ 6,000	$ 6,000
	Equipment				
8	MBR and Equipment	1	LS	$ 2,300,000	$ 2,300,000
9	EQ Storage Pumps	3	EA	$ 40,000	$ 120,000
10	EQ Basin Mixers	2	EA	$ 45,000	$ 90,000
11	Anoxic Mixers	4	EA	$ 45,000	$ 180,000
12	Fine Screen	2	EA	$ 350,000	$ 700,000
13	Chemical Storage	1	LS	$ 150,000	$ 150,000
14	Bridge Crane	1	LS	$ 60,000	$ 60,000
15	Fine Bubble Aeration System	2	EA	$ 95,000	$ 190,000
	Modifications				
16	Concrete	166	CY	$ 1,000	$ 166,000
17	Concrete Demo	1	LS	$ 5,000	$ 5,000
18	MBR Tank Concrete Top	40	CY	$ 1,200	$ 48,000
19	Permeate Pump Room Demo	1	LS	$ 2,500	$ 2,500
20	Digester No. 1 Demo	1	LS	$ 15,000	$ 15,000
21	Fine Screen Platform	1	LS	$ 25,000	$ 25,000
22	Clarifier Demo and Modifications	2	EA	$ 25,000	$ 50,000
23	EQ Basin Covers and Odor Control	1	LS	$ 1,000,000	$ 1,000,000
	Miscellaneous				
25	Maintenance of Flow	1	LS	$ 80,000	$ 80,000
26	Electrical and Instrumentation (25%)	1	LS	$ 1,460,940	$ 1,460,940
27	Miscellaneous Costs (15%)	1	LS	$ 876,560	$ 876,560
				Subtotal Construction Cost	**$ 8,181,225**
28	Construction Contingency (30%)	1	LS	$ 2,454,370	$ 2,454,370
29	Engineering and Administration (20%)	1	LS	$ 1,636,250	$ 1,636,250
				Total Project Cost	**$12,271,845**

O&M costs include permeate pumping power, forward feed pumping power, blower power, anoxic mixing power, EQ mixing power, chemicals, and manpower. The estimated yearly operating cost is roughly $200,000 with an annualized equipment R&R cost of $113,700. At an assumed interest rate of 3%, the average annual operational cost has a 20-year NPW of $4,666,915. A cost summary table for Alternative Five is presented in **Table 16** below.

Table 16. Summary of Costs for Alternative Five: MBR Process

Estimated Costs	Cost
Capital Cost	$12,271,845
Average Annual Operational Cost	$313,700
20-Year NPW	$16,938,760

4.4 Alternative Six: Integrated Fixed-Film Activated Sludge System Evaluation

The new IFAS system would mimic the "Base" MLE process with the addition of plastic media inside the aeration basin. Adequate mixing must be provided within the aerobic zone to ensure that the free-floating media remains uniformly distributed. The mixing energy provided by subsurface mixers is critical for sloughing of biomass on the media. Increased DO concentrations, typically between 3.0 to 4.0 mg/L, are required in the suspended phase to ensure that the biofilm is completely aerobic. To contain the free-floating media within the aerobic zone, effluent screens will have to be installed. A common issue that can arise with an IFAS system is foam accumulation. Foam removal technologies should be considered when IFAS systems are put into practice.

Effluent quality predictions from the developed BioWin® process model result in a TN effluent concentration of 8.0 mg/L at 4.5 MGD (109,590 lbs./year) and 8.0 mg/L at 3.5 MGD (85,240 lbs./year). Additional effluent TN reduction achieved by the IFAS process is 164,410 lbs./year at 4.5 MGD and 85,260 lbs./year at 3.5 MGD when compared to current plant performance.

After modeling and from a cost-benefit perspective, REI concluded that the IFAS alternative would not yield significant enough TN reduction compared to the "Base" MLE alternative. In lieu of performing a full evaluation of the IFAS alternative, REI added Alternative Seven presented below.

4.5 Alternative Seven: Single-Stage Aeration with TETRA™ Denite® Filters

Denite® is a fixed-film biological denitrification process which also serves as a deep bed filtration system capable of removing suspended solids to a limit of 2 to 3 mg/L. Denitrification filters can also be used as a part of the treatment process to meet stringent TN discharge limits as low as 3 mg/L. The De Nora TETRA™ Denite® system requires about one-tenth of the space used with suspended growth biological denitrification systems. The process works by converting nitrate to nitrogen gas, which is then captured within the media bed along with suspended solids and biomass formed from the denitrification reaction. A readily biodegradable organic compound (carbon source) must be available for the denitrification process to take place. Since denitrifying filters are placed downstream of aerobic treatment, where most of the organic material is oxidized, an additional carbon source must be fed to the filter influent. Methanol is typically used as an additional carbon source as it has proven to be the most cost-effective chemical that is readily degraded under both anoxic and aerobic conditions.

The Vero Beach WWTP currently houses ten (10) filter cells, each with four (4) Parkson DynaSand® filters in its filtration building. This alternative proposes to replace a portion of the existing reuse filters with De Nora TETRA™ Denite® filters. A budgetary proposal provided by De Nora Water Technologies, Inc. recommends four (4), 11'-8" x 49'-4" TETRA™ Denite® filters, each with 6' of Tetra™ #5 media to meet an effluent TN limit of less than 3 mg/L at permitted capacity (4.5 MGD). In order to meet the City's target of less than 9 mg/L TN, only two (2) filters will be needed. This will be accomplished by splitting the flow between the Denite® filters and the existing filtration process, then blending the two streams together prior to chlorination.

The new single-stage aeration system with Denite® filters will require additional treatment volume that will be provided by re-purposing Sludge Tank No. 1. The proposed modifications for this alternative are listed below:

- Convert Sludge Tank No. 1 to Aeration Basin No. 3
- Install new fine bubble aeration system in all three (3) aeration basins
- Construct new influent channel on North end of Aeration Basin No. 3
- Tie Aeration Basin No. 3 influent channel into existing influent channels
- Construct new effluent channel on South end of Aeration Basin No. 3
- Tie Aeration Basin No. 3 effluent channel into existing effluent channel (to clarifiers)
- Construct new effluent boxes in all three (3) aeration basins
- Construct and install new flow control device at clarifier effluent
- Construct and install Denite® filters where the abandoned sludge drying bed is located
- Install new clarifier effluent piping to Denite® filters
- Install new Denite® filter effluent piping and tie into existing CCC influent piping
- Install Denite® filter backwash pump station and pumps
- Install new gravity/force main piping for Denite® filter backwash to headworks building

The proposed conceptual site layout (**Figure B-8**) and process flow diagram (**Figure B-9**) for Alternative Seven with two (2) Denite® filters is presented in **Appendix B**.

4.5.1 Alternative Seven: Denite® Filters (x2) Effluent TN Reduction

Based on the De Nora proposal, the assumed effluent TN concentration from the Denite® filters is 1.0 mg/L; and based on historical data, the existing filtration process produces an effluent TN of 16 mg/L. By blending the existing reuse filter effluent with the proposed denitrification filter effluent, the plant can achieve an effluent TN concentration of less than 9 mg/L. For this evaluation, the minimum flow rate required to pass through the Denite® filters to meet effluent TN goals was calculated. Sending more flow to the Denite® filters will result in a greater reduction of TN. **Table 17** presents the mass balance results from the blending of the two filtration processes at the minimum required flows to meet the TN limit of 9 mg/L.

Table 17. Blended Filtration Effluent TN Results

Influent Flow	Existing Filter Flow	Denite® Filter Flow	Blended TN Effluent
3.5 MGD	1.85 MGD (52.9%)	1.65 MGD (47.1%)	8.9 mg/L
4.5 MGD	2.4 MGD (53.3%)	2.1 (46.7%)	9.0 mg/L

At a minimum, this alternative can achieve an effluent TN concentration of 9.0 mg/L at 4.5 MGD (123,290 lbs./year) and 8.9 mg/L at 3.5 MGD (94,830 lbs./year) from the flow split ratios shown above. Additional effluent TN reduction achieved by installing two (2) Denite® filters is **150,710 lbs./year** at 4.5 MGD and **75,670 lbs./year** at 3.5 MGD when compared to current plant performance.

4.5.2 Alternative Seven: Denite® Filters (x4) Effluent TN Reduction

With four (4) Denite® filters installed, the existing filtration process can be eliminated. The plant would be able to achieve an effluent TN concentration of 3.0 mg/L at 4.5 MGD (41,100 lbs./year) and 3 mg/L at 3.5 MGD (31,970 lbs./year). Additional effluent TN reduction achieved by installing four (4) Denite® filters is **232,900 lbs./year** at 4.5 MGD and **138,530 lbs./year** at 3.5 MGD when compared to the current plant performance.

4.5.3 Alternative Seven: Denite® Filters (x2) Cost Estimate

The estimated capital cost breakdown for Alternative Seven with two (2) Denite® filters installed is presented in **Table 18** below.

Table 18. Alternative Seven: Denite® Filters (x2) Capital Cost Estimate

Item No.	Item	Quantity	Units	Unit Cost	Cost
	Piping				
1	24" DeNite Filter Piping	680	LF	$ 605	$ 411,400
2	8" DeNite Filter Backwash Piping	150	LF	$ 150	$ 22,500
3	4" DeNite Filter Force Main	295	LF	$ 90	$ 26,550
4	3" Carbon Feed Piping	175	LF	$ 75	$ 13,125
	Equipment				
5	DeNite Filters	2	EA	$ 445,000	$ 890,000
6	DeNite Filter Backwash Pump Station	1	EA	$ 225,000	$ 225,000
7	24" x 24" Slide Gate Replacement	12	EA	$ 6,500	$ 78,000
8	Methanol Feed System	1	LS	$ 290,000	$ 290,000
9	Fine Bubble Aeration System	3	EA	$ 95,000	$ 285,000
	Modifications				
10	Aeration Effluent Box	3	EA	$ 4,000	$ 12,000
11	Aeration No. 3 Influent Channel	12	CY	$ 1,000	$ 12,000
12	Aeration No. 3 Effluent Channel	12	CY	$ 1,000	$ 12,000
13	Concrete Demo	1	LS	$ 5,000	$ 5,000
14	Digester No. 1 Demolition	1	LS	$ 10,000	$ 10,000
	Miscellaneous				
15	Maintenance of Flow	1	LS	$ 25,000	$ 25,000
16	Electrical and Instrumentation (25%)	1	LS	$ 579,400	$ 579,400
17	Miscellaneous Costs (15%)	1	LS	$ 347,640	$ 347,640
				Subtotal Construction Cost	**$ 3,244,615**
18	Construction Contingency (30%)	1	LS	$ 973,390	$ 973,390
19	Engineering and Administration (20%)	1	LS	$ 648,930	$ 648,930
				Total Project Cost	**$ 4,866,935**

O&M costs include chemical, backwash pump power, backwash pump station power, and manpower. The estimated yearly operating cost is roughly $180,000 with an annualized equipment R&R cost of $53,100. At an assumed interest rate of 3%, the average annual operational cost has a 20-year NPW of $3,467,835. A cost summary table for Alternative Seven with two (2) Denite® filters is presented in **Table 19**.

Table 19. Summary of Costs for Alternative Seven: Denite® Filters (x2)

Estimated Costs	Cost
Capital Cost	$4,866,935
Average Annual Operational Cost	$233,100
20-Year NPW	$8,334,770

4.5.4 Alternative Seven: Denite® Filters (x4) Cost Estimate

The estimated capital cost for Alternative Seven with four (4) Denite® filters installed includes an additional $890,000 for the two (2) Denite® filters that will be installed plus additional electrical and instrumentation, miscellaneous, contingency, and engineering/administration costs. All other line items and costs from **Table 18** remain the same.

Installing four (4) Denite® filters doubles chemical and power cost, no additional labor cost was assumed. This option brings the estimated yearly operating cost to roughly $310,000 with an annualized equipment R&R cost of $79,800. At an assumed interest rate of 3%, the average annual operational cost has a 20-year NPW of $5,799,055. A cost summary table for Alternative Seven with four (4) Denite® filters is presented in **Table 20** below.

Table 20. Summary of Costs for Alternative Seven: Denite® Filters (x4)

Estimated Costs	Cost
Capital Cost	$6,735,935
Average Annual Operational Cost	$389,800
20-Year NPW	$12,534,990

5.0 CONCLUSION

5.1 Plant TN Reduction

Plant TN reduction can be described as the difference between influent TKN and effluent TN. With an influent TKN concentration of 43.0 mg/L, the estimated TN mass loadings into the plant are approximately 589,040 lbs./year at 4.5 MGD and 458,140 lbs./year at 3.5 MGD. These influent loading values were used for the basis of quantifying plant TN reduction. By subtracting the effluent TN from each alternative by the influent TKN, the total amount of TN removed by the plant was determined. The total amount of TN removed from the existing plant and proposed alternatives is presented in **Table 21** for 4.5 MGD flow and in **Table 22** for 3.5 MGD flow.

Table 21. Plant TN Reduction at 4.5 MGD

Alternative	Effluent TN (mg/L)	Effluent TN (lbs./year)	TN Removed [1] (mg/L)	TN Removed [2] (lbs./year)
Existing Plant	20.0	274,000	23.0	315,040
MLE Process	8.8	120,550	34.2	468,490
MBR Process	4.2	57,540	38.8	531,500
Denite® Filters (x2)	9.0	123,290	34.0	465,750
Denite® Filters (x4)	3.0	41,100	40.0	547,940

[1] *Influent TKN = 43.0 mg/L; 43.0 mg/L – Effluent TN (mg/L) = TN Removed (mg/L)*
[2] *Influent TKN = 589,040 lbs./year; 589,040 lbs./year – Effluent TN (lbs./year) = TN Removed (lbs./year)*

Table 22. Plant TN Reduction at 3.5 MGD

Alternative	Effluent TN (mg/L)	Effluent TN (lbs./year)	TN Removed [1] (mg/L)	TN Removed [2] (lbs./year)
Existing Plant	16	170,500	27.0	287,640
MLE Process	7.8	83,110	35.2	375,030
MBR Process	4.1	43,690	38.9	414,450
Denite® Filters (x2)	8.9	94,830	34.1	363,310
Denite® Filters (x4)	3.0	31,970	40.0	426,170

[1] *Influent TKN = 43.0 mg/L; 43.0 mg/L – Effluent TN (mg/L) = TN Removed (mg/L)*
[2] *Influent TKN = 458,140 lbs./year; 458,140 lbs./year – Effluent TN (lbs./year) = TN Removed (lbs./year)*

5.2 Additional TN Reduction from Proposed Alternatives

Additional TN reduction can be described as the difference between the existing plant's effluent TN and the proposed alternative's effluent TN. The predicted plant effluent TN is approximately 20 mg/L at 4.5 MGD (274,000 lbs./year) and 16 mg/L at 3.5 MGD (170,500 lbs./year). By subtracting the proposed alternative's effluent TN by the existing plant's effluent TN, the additional amount of TN removed by the proposed alternative was determined. The additional amount of TN removed by the implementation of each alternative is presented in **Table 23** for 4.5 MGD flow and in **Table 24** for 3.5 MGD flow.

Table 23. Additional TN Reduction at 4.5 MGD

Alternative	Effluent TN (mg/L)	Effluent TN (lbs./year)	Addt'l TN [1] Removed (mg/L)	Addt'l TN [2] Removed (lbs./year)
MLE Process	8.8	120,550	11.2	153,450
MBR Process	4.2	57,540	15.8	216,460
Denite® Filters (x2)	9.0	123,290	11.0	150,710
Denite® Filters (x4)	3.0	41,100	17.0	232,900

[1] *Existing Plant Effluent = 20.0 mg/L; 20.0 mg/L – Effluent TN (mg/L) = Addt'l TN Removed (mg/L)*
[2] *Existing Plant Effluent = 274,000 lbs./year; 274,000 lbs./year – Effluent TN (lbs./year) = Addt'l TN Removed (lbs./year)*

Table 24. Additional TN Reduction at 3.5 MGD

Alternative	Effluent TN (mg/L)	Effluent TN (lbs./year)	Addt'l TN [1] Removed (mg/L)	Addt'l TN [2] Removed (lbs./year)
MLE Process	7.8	83,110	8.2	87,390
MBR Process	4.1	43,690	11.9	126,810
Denite® Filters (x2)	8.9	94,830	7.1	75,670
Denite® Filters (x4)	3.0	31,970	13.0	138,530

[1] *Existing Plant Effluent = 16.0 mg/L; 16.0 mg/L – Effluent TN (mg/L) = Addt'l TN Removed (mg/L)*

[2] *Existing Plant Effluent = 170,500 lbs./year; 170,500 lbs./year – Effluent TN (lbs./year) = Addt'l TN Removed (lbs./year)*

5.3 Economic Evaluation

The 20-year NPW analysis only applies to costs associated with the alternative improvements. Additional TN reduction values were used to determine the cost per pound TN reduction for each alternative at the plant's permitted flow of 4.5 MGD. A cost per pound additional TN reduced per year for each alternative is presented in **Table 25**.

Table 25. Summary of Alternative Costs and TN Reduction at Permitted Capacity (4.5 MGD)

Alternative	20-Year NPW	Addt'l TN Reduction (lbs./year)	$/lbs. Addt'l TN Reduced
MLE Process [1]	$6,754,250	153,450	$44.00
MBR Process [2]	$16,938,760	216,460	$78.25
Denite® Filters (x2) [1]	$8,334,770	150,710	$55.50
Denite® Filters (x4) [2]	$12,534,990	232,900	$54.00

[1] *The costs associated with renovating the existing reuse filters is not included in the 20-year NPW*

[2] *These alternatives do not require renovating the existing reuse filters at an estimated cost of $3.5 million*

5.4 Recommendation

While all alternatives presented can achieve additional TN reduction without new tankage down to 9 mg/L TN, Alternative Two (MLE process) and Alternative Five (MBR process) would be more difficult to construct while maintaining existing treatment and maintenance of flow. Alternative Seven (Denite® filters) can be constructed much more easily and reduces the risk to disrupt existing plant operations during construction and startup. Alternative Seven provides the City with the flexibility to operate the plant, as needed, to meet a TN limit of 3 mg/L when four (4) Denite® filters are installed. In addition, installing four (4) Denite® filters eliminates the need for the City to renovate their existing reuse filters, which has an estimated cost of $3.5 million.

Based on constructability, cost, operational flexibility, and ability to meet a range of TN effluent concentrations, REI recommends Alternative Seven with four (4) Denite® filters.

Appendix A
Alternative Evaluation Assumptions

CITY OF VERO BEACH, FLORIDA
WATER AND SEWER DEPARTMENT
NUTRIENT MANAGEMENT STUDY

Phase II Conference Call
Review and Discussion of Existing vs. New Plant with City and Kimley-Horn
January 18, 2019

Conference Call Summary

1. 20-year analysis will be basis of cost comparison.
2. Assume discount rate of 3% and inflation rate of 2.5%.
3. Assume 10-year replacement for membrane.
4. Assume power costs for membrane is between 5,000-7,000 kWh per million gallons.
5. Kubota or GE Water (now SUEZ Environment) Membrane
6. Engineering and contingency (combined) are assumed to be 30%.
7. Electrical and I&C are assumed to be 20-25%.
8. Target membrane MLSS concentration assumed to be 8,000-10,000 mg/L.
9. Phosphorus removal is not a concern.
10. Plant effluent goals:
    a. cBOD ≤ 5 mg/L
    b. TSS ≤ 5 mg/L
    c. Total Nitrogen ≤ 9 mg/L (3 mg/L for Advanced Wastewater Treatment)
    d. Total Phosphorus ≤ 3
11. Electric Bill for 2018 was about $319,000 at 3.2 mgd ADF.
12. Assumed $0.10/kWh.

Appendix B
Figures

Figure B-1: Existing Plant Site Layout
Figure B-2: Existing Plant – Flow Diagram
Figure B-3: Aeration Basin Dissolved Oxygen Sampling Results
Figure B-4: Alternative Two: MLE Process – Conceptual Layout
Figure B-5: Alternative Two: MLE Process – Flow Diagram
Figure B-6: Alternative Five: MBR Process – Conceptual Layout
Figure B-7: Alternative Five: MBR Process – Flow Diagram
Figure B-8: Alternative Seven: Denite Filters (x2) – Conceptual Layout
Figure B-9: Alternative Seven: Denite Filters (x2) – Flow Diagram

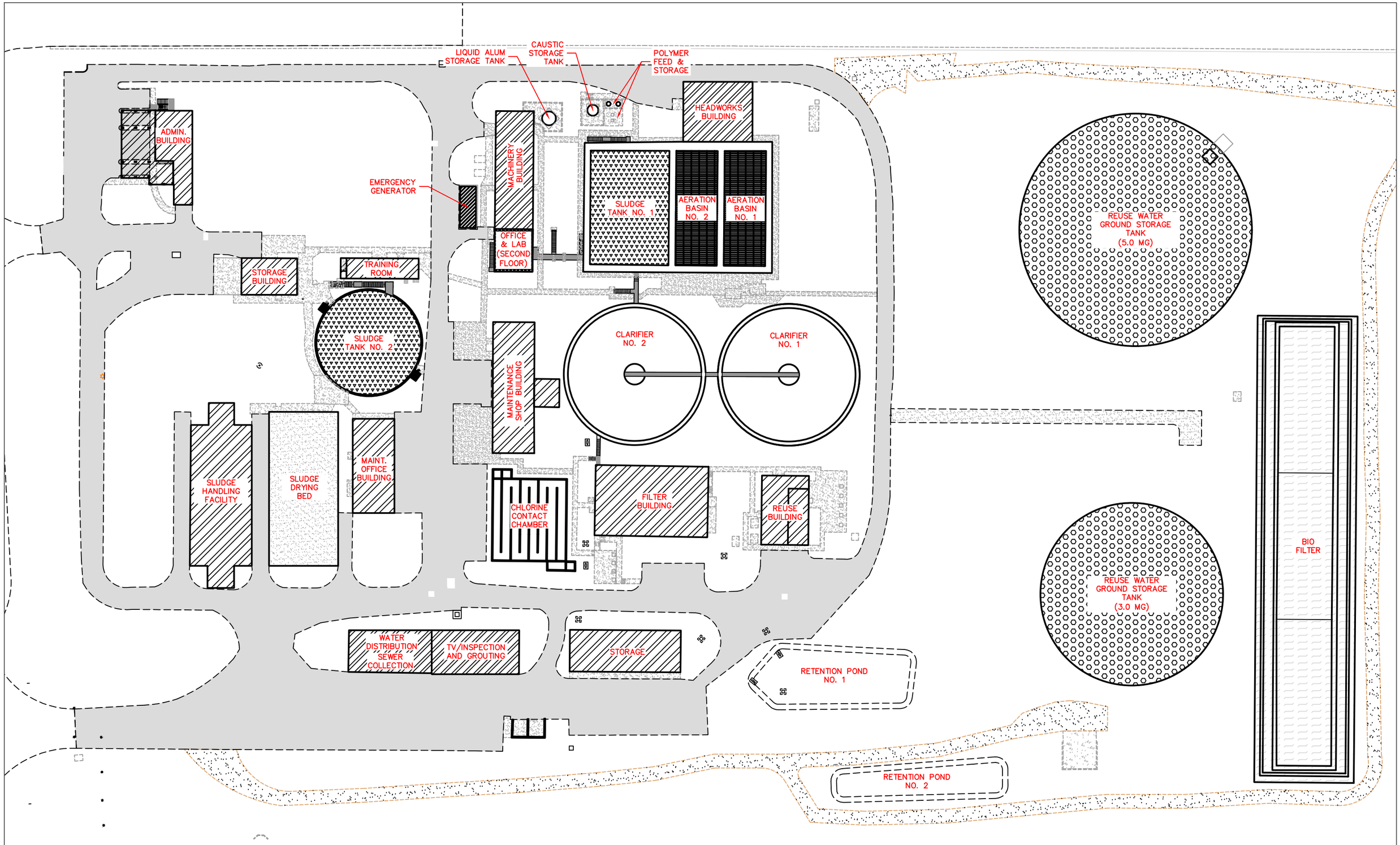

CITY OF VERO BEACH NUTRIENT MANAGEMENT STUDY	EXISTING PLANT SITE LAYOUT	CITY OF VERO BEACH WWTP	FIGURE B–1

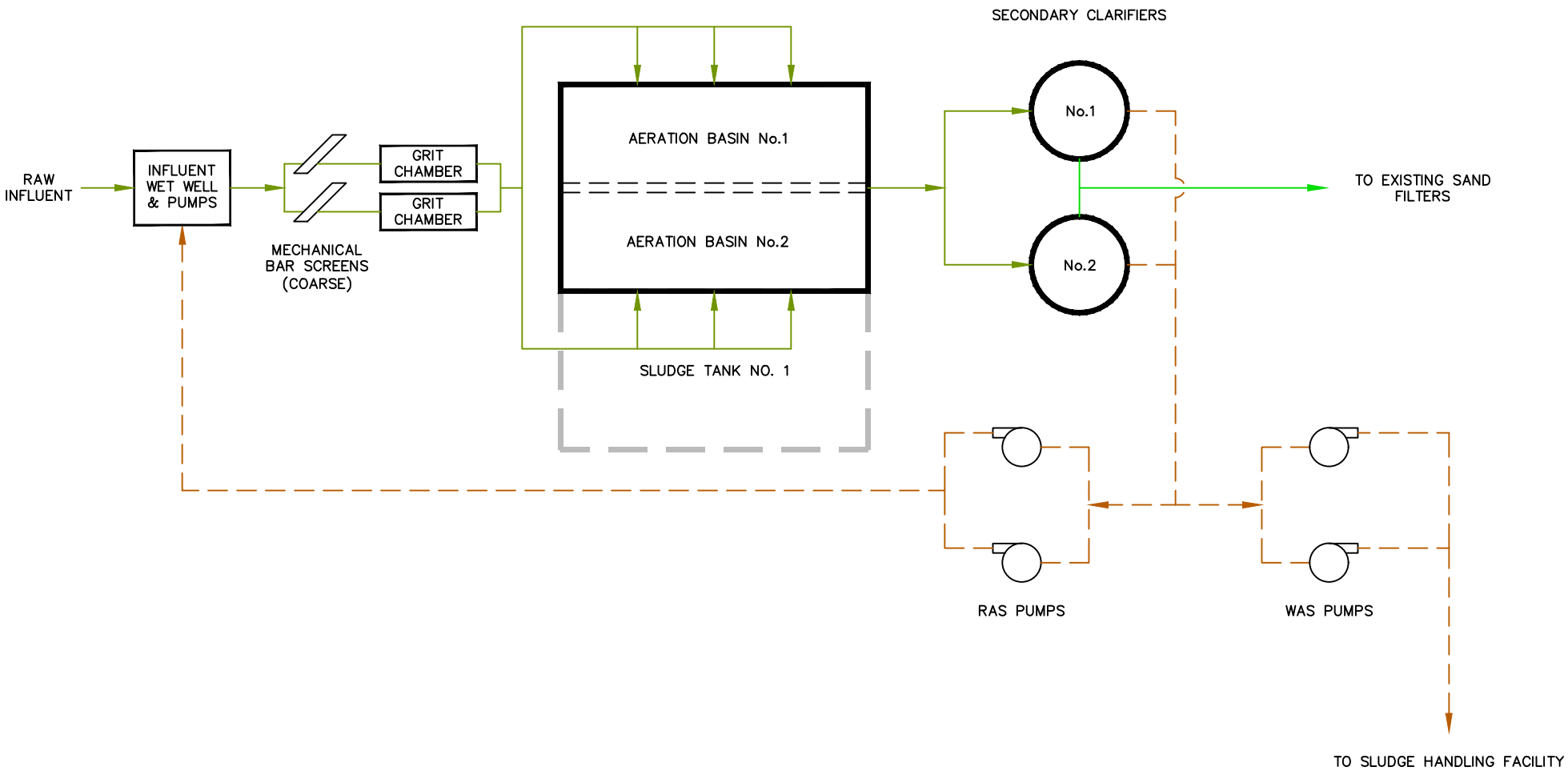

RE	CITY OF VERO BEACH NUTRIENT MANAGEMENT STUDY	EXISTING PLANT – FLOW DIAGRAM	FIGURE B–2

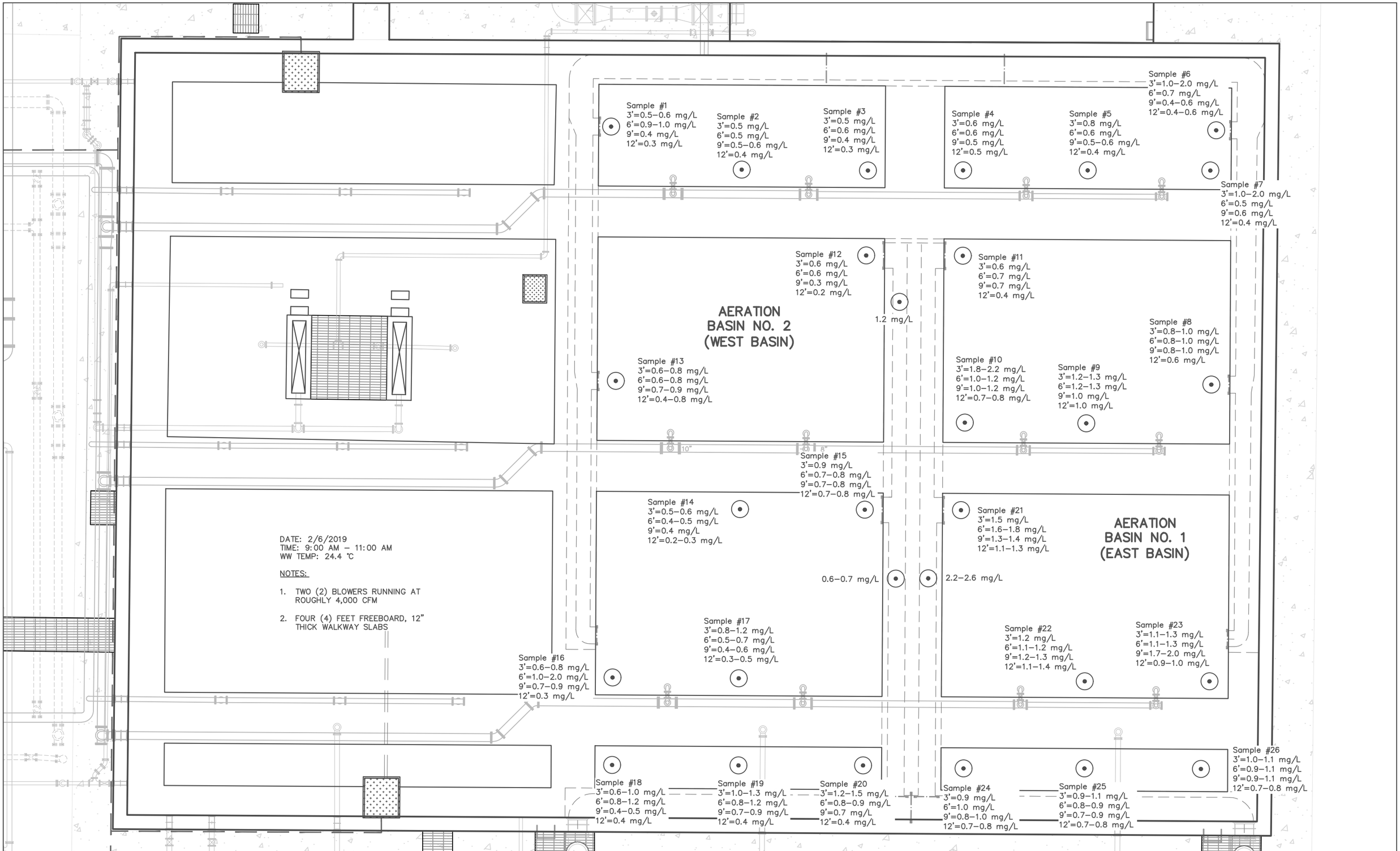

CITY OF VERO BEACH NUTRIENT MANAGEMENT STUDY	AERATION BASIN DISSOLVED OXYGEN SAMPLING RESULTS	CITY OF VERO BEACH WWTP	FIGURE B–3

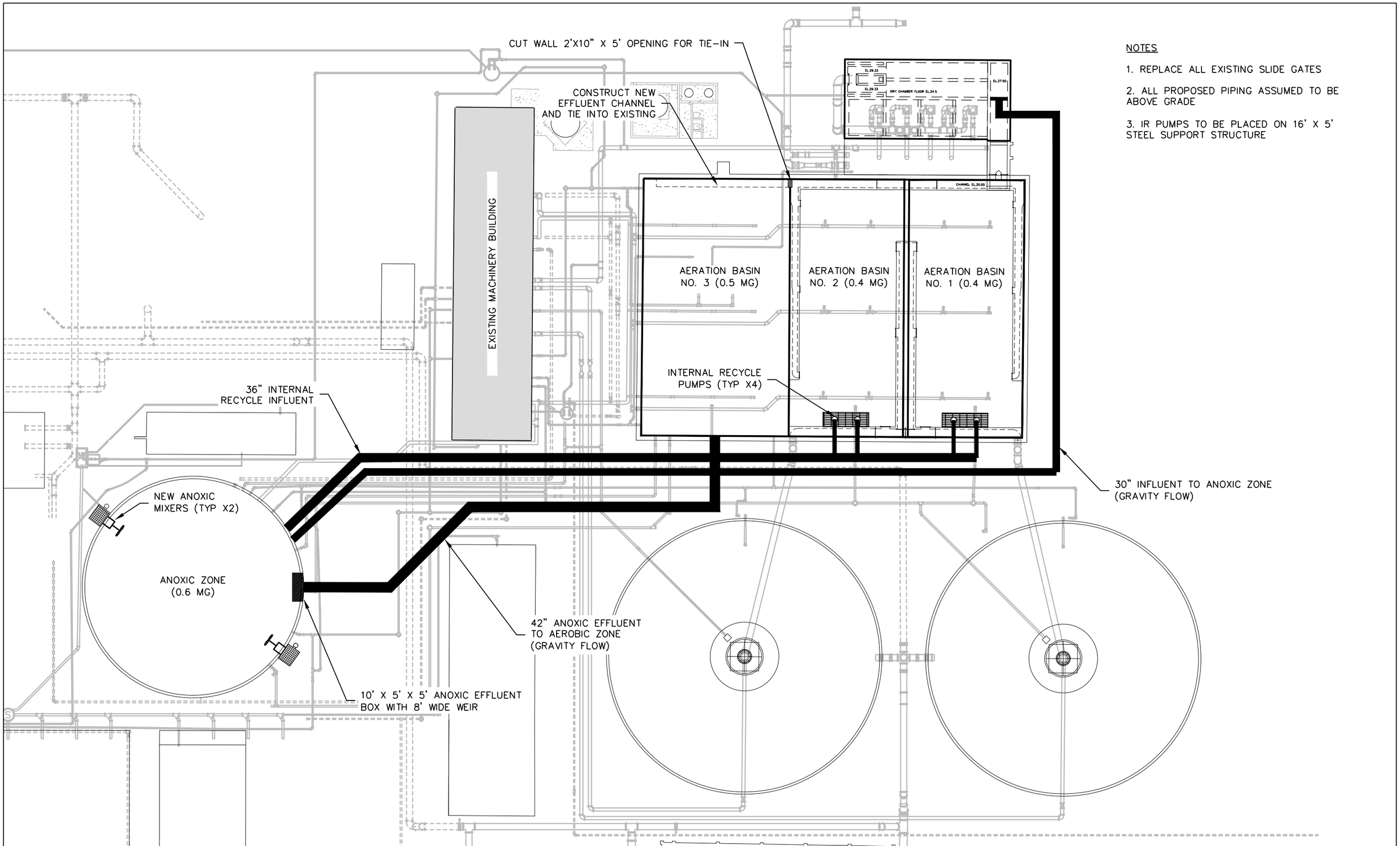

NOTES

1. REPLACE ALL EXISTING SLIDE GATES
2. ALL PROPOSED PIPING ASSUMED TO BE ABOVE GRADE
3. IR PUMPS TO BE PLACED ON 16' X 5' STEEL SUPPORT STRUCTURE

CITY OF VERO BEACH NUTRIENT MANAGEMENT STUDY	ALTERNATIVE TWO: MLE PROCESS – CONCEPTUAL LAYOUT	CITY OF VERO BEACH WWTP	FIGURE B-4

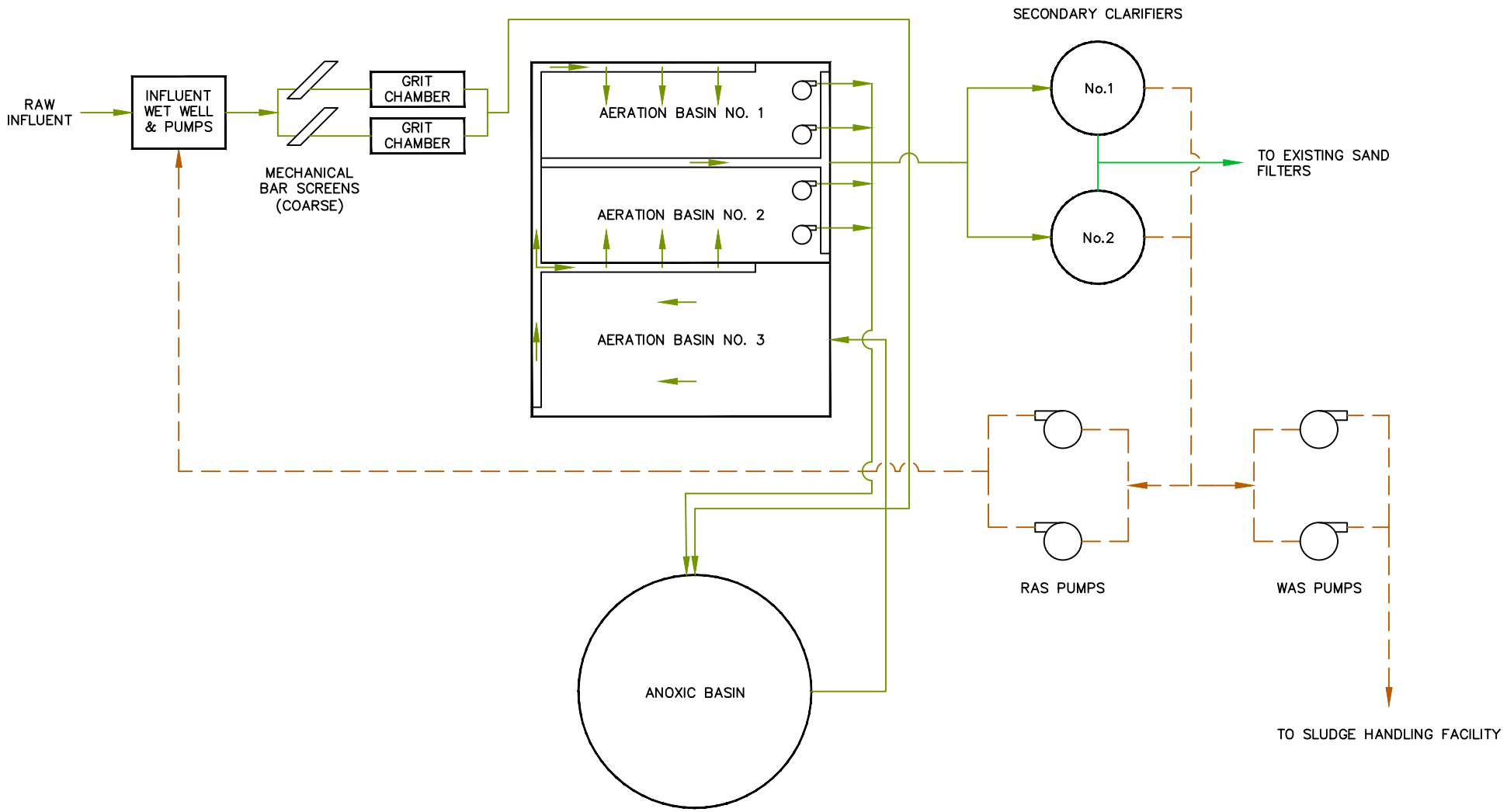

RE	CITY OF VERO BEACH NUTRIENT MANAGEMENT STUDY	ALTERNATIVE TWO: MLE PROCESS – FLOW DIAGRAM	FIGURE B–5

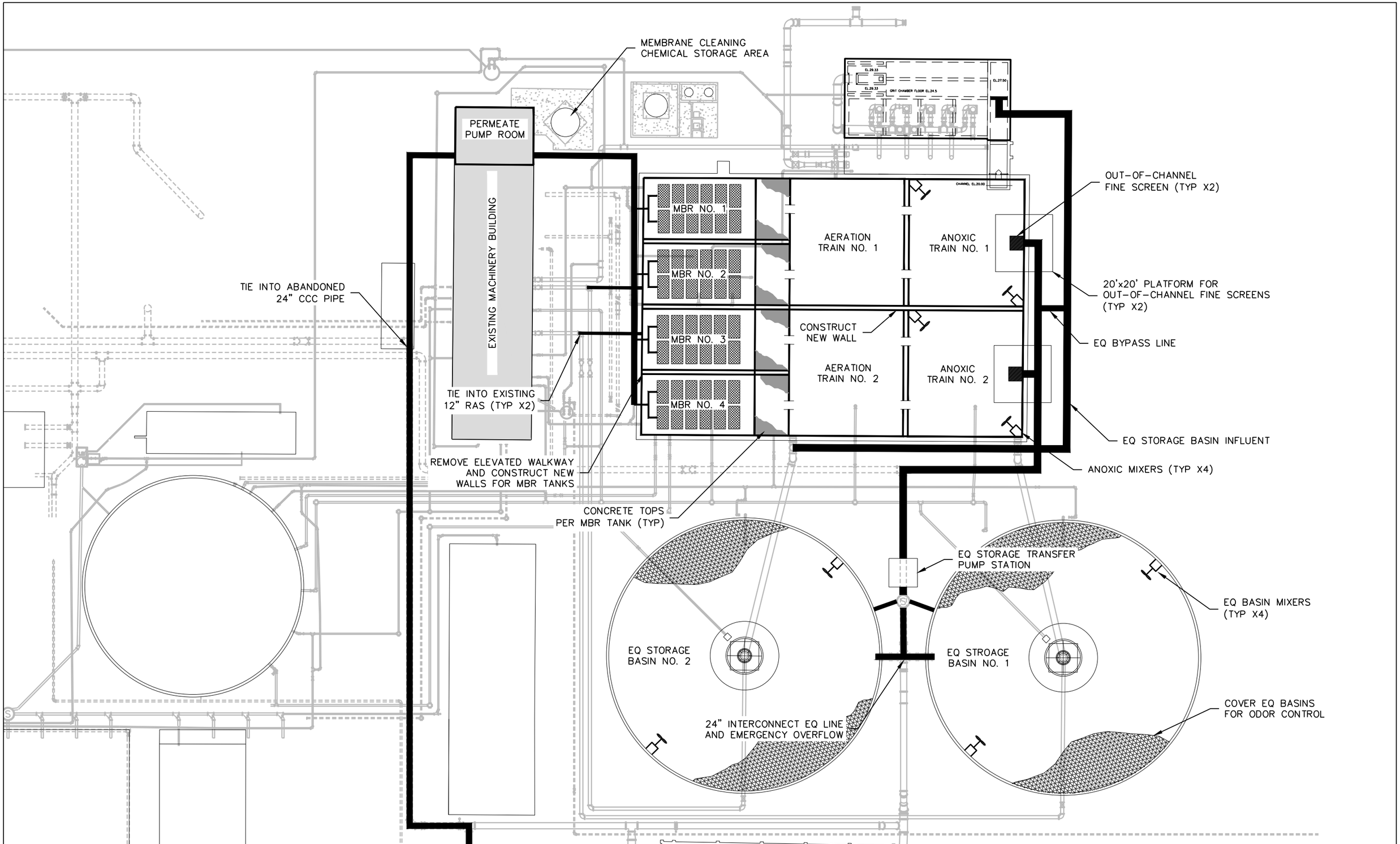

CITY OF VERO BEACH NUTRIENT MANAGEMENT STUDY	ALTERNATIVE FIVE: MBR PROCESS – CONCEPTUAL LAYOUT	CITY OF VERO BEACH WWTP	FIGURE B-6

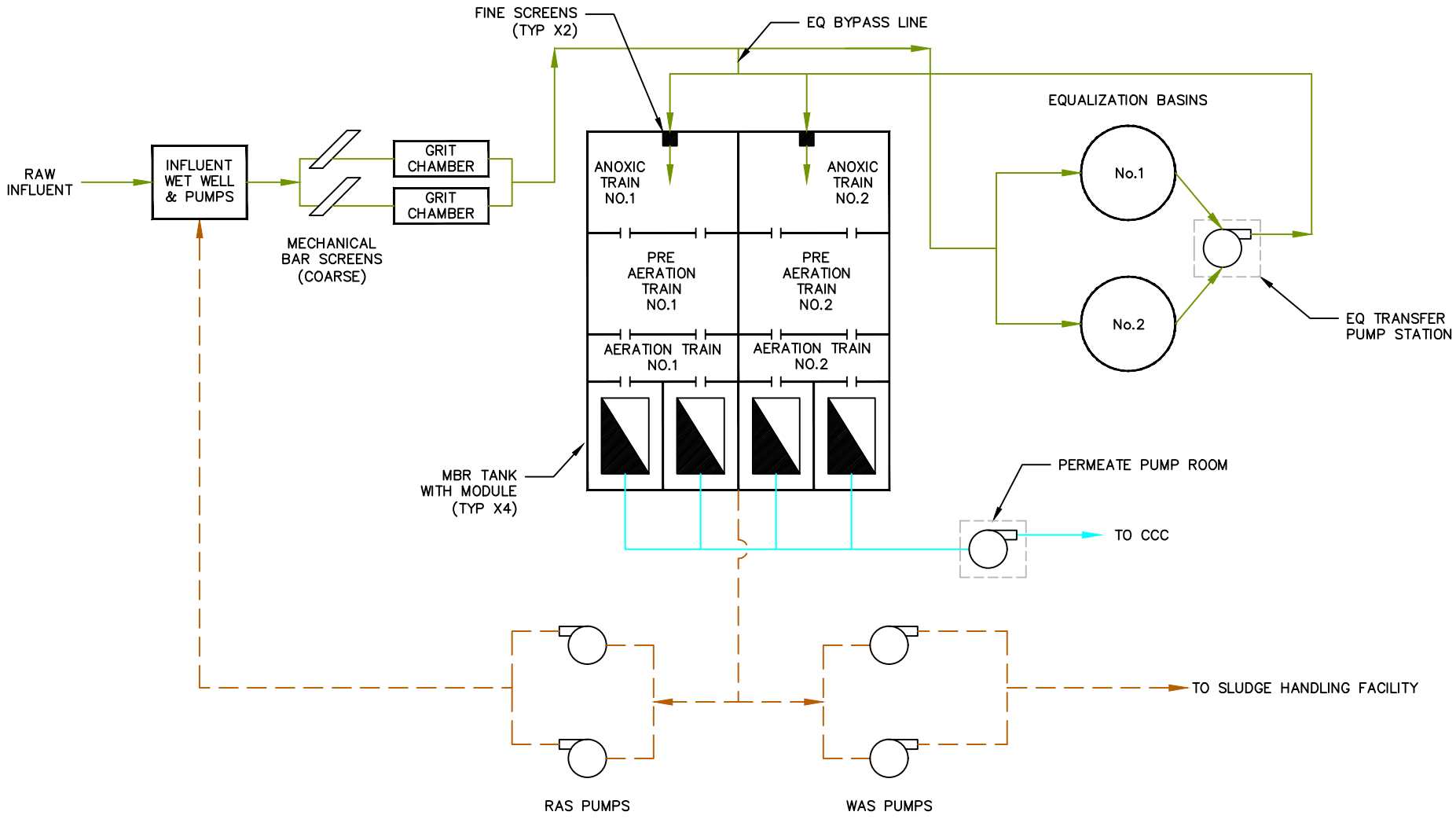

RE	CITY OF VERO BEACH NUTRIENT MANAGEMENT STUDY	ALTERNATIVE FIVE: MBR PROCESS – FLOW DIAGRAM	FIGURE B–7

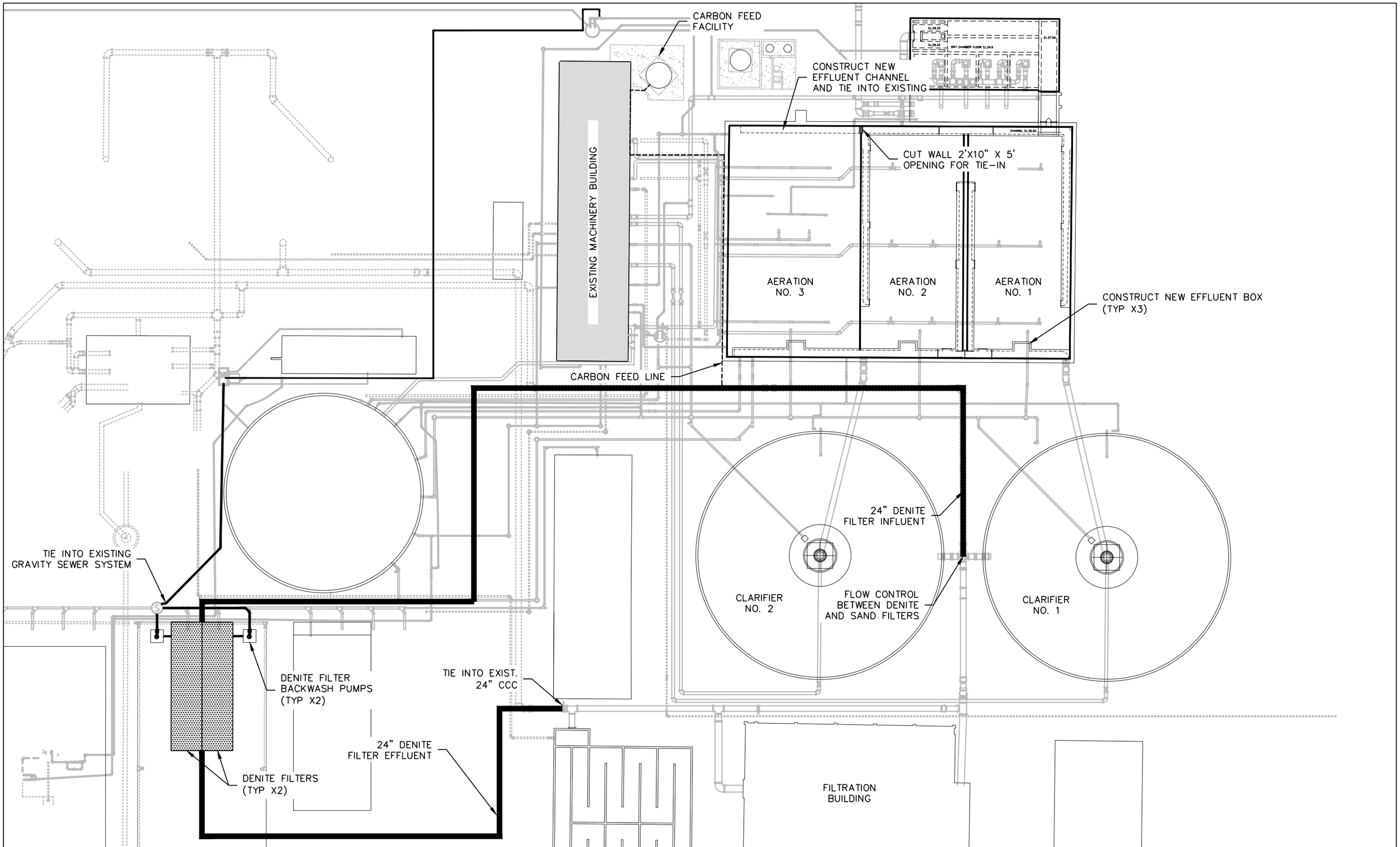

CITY OF VERO BEACH NUTRIENT MANAGEMENT STUDY	ALTERNATIVE SEVEN: DENITE FILTERS (X2) – CONCEPTUAL LAYOUT	CITY OF VERO BEACH WWTP	FIGURE B-8

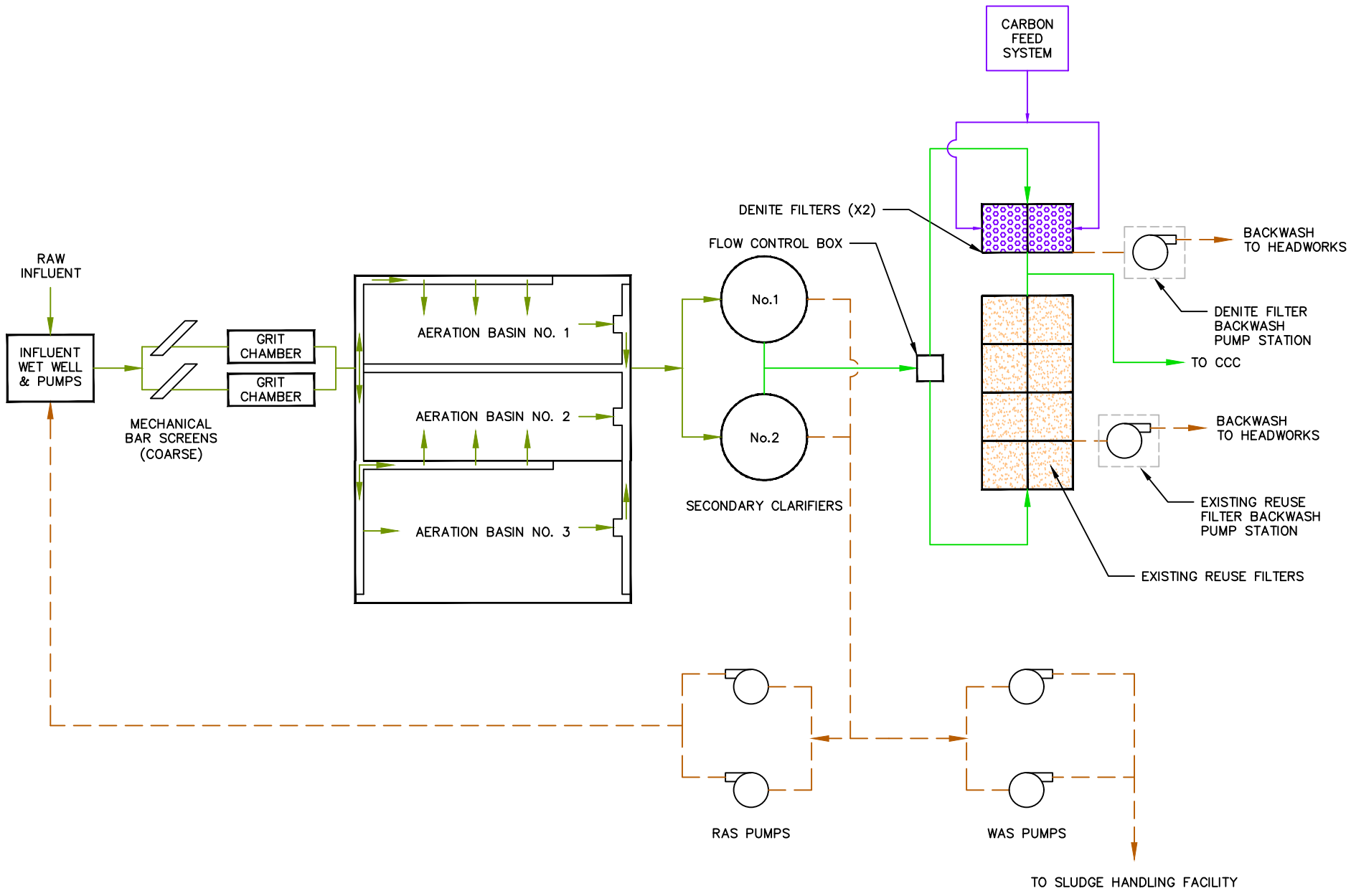

RE	CITY OF VERO BEACH NUTRIENT MANAGEMENT STUDY	ALTERNATIVE SEVEN: DENITE FILTERS (X2) – FLOW DIAGRAM	FIGURE B–9