CITY OF VERO BEACH RELOCATED WASTEWATER RECLAMATION FACILITY

PRELIMINARY DESIGN REPORT

DRAFT

Prepared For:

City of Vero Beach

Kimley»Horn

November 2019
Project No. 04048010
© Kimley-Horn and Associates, Inc.
1920 Wekiva Way
Suite 200
West Palm Beach, FL 33411
561-845-0665 TEL / 561-863-8175 FAX

CITY OF VERO BEACH RELOCATED WASTEWATER RECLAMATION FACILITY

PRELIMINARY DESIGN REPORT

DRAFT

_____
Matthew Michael Tebow, PE
Florida Registration Number 82414
CA 00000696

Date: _____

Table of Contents

1. Introduction 11
1.1. Existing Facility History and Background 11
1.2. Project Background....12
1.3. Purpose 15
1.4. Permitting Wastewater Facilities Requirements 15
2. Existing and Design Wastewater Flows and Characteristics....18
2.1. Existing Wastewater Treatment 18
2.2. Historical Wastewater Flows and Characteristics 18
2.3. Current and Project Population Projections....22
2.4. Proposed Design Wastewater Flow and Loading Conditions 22
3. Basis of Design Criteria....24
3.1. Regulatory Basis of Design Criteria 24
3.1.1. Florida Department of Environment Protection Requirements....24
3.1.2. USEPA Reliability Requirements 25
3.1.3. National Pollutant Discharge Elimination System Program 26
3.1.4. Biosolids Management....27
3.1.5. Stormwater Management....27
3.2. Treatment Process Basis of Design Criteria....27
3.2.1. Design Criteria for Biological Nutrient Removal....27
3.2.2. Design Criteria for Tertiary Filtration Technology 29
3.2.3. Impacts of Septic Tank Effluent Pump Stations....29
3.2.4. Impacts of Water Conservation 29
3.2.5. Impacts of Industrial Wastes 29
3.2.6. Impacts of Resilience Considerations 30
3.2.7. Criteria for Flow Rate and Mass Loading Conditions....30
3.3. Effluent Discharge Basis of Design Criteria....32
4. Description of Proposed Water Reclamation Facilities 33
4.1. Unit Process Selection....33
4.2. Preliminary Treatment: Headworks and Influent Pump Station 38
4.2.1. Influent Master Lift Station 38
4.2.2. Influent Flow Measurement....38

4.2.3. Influent Sampling 38
4.2.4. Headworks Structure 38
4.2.5. First Stage (Initial) Screening 39
4.2.6. Second Stage (Fine) Screening 39
4.2.7. Screenings Washing and Compacting 40
4.2.8. Grit Removal Chamber 40
4.2.9. Grit Pumps 41
4.2.10. Grit Classifying/Washing/Dewatering Unit 41
4.2.11. Odor Control 41
4.3. Flow Equalization 42
4.3.1. Flow Equalization Type 42
4.3.2. Flow Equalization Tank Sizing 43
4.3.3. Flow Equalization Mixing 43
4.3.4. Flow Equalization Return Pump Station 44
4.3.5. Flow Equalization Odor Control 44
4.4. Primary Clarification 44
4.5. Biological Treatment Process 44
4.5.1. Biological Treatment Process – Five-Stage MBR Bardenpho 45
4.5.2. Process and Hydraulic Flow 48
4.5.3. Process Configurations 48
4.5.4. Tapered Diffused Aeration System 49
4.6. Secondary Clarification 49
4.7. Membrane Filtration 50
4.7.1. Membrane Filtration 50
4.7.2. Membrane Filtration System Supplier 50
4.7.3. Membrane Filtration Flux 51
4.7.4. Membrane Cleaning System 53
4.7.5. Membrane Element Redundancy 53
4.8. Disinfection Treatment Process 54
4.8.1. Gaseous Chlorine 54
4.8.2. Disinfection Design Criteria 54
4.8.3. Chlorine Contact Structure 54
4.9. Biosolids Management 56

4.9.1. Aerated Sludge Holding Tank and Thickening 56
4.9.2. Biosolids Treatment – Chemical Stabilization....57
4.9.3. Biosolids Dewatering – Centrifuge 57
4.9.4. Odor Control 57
4.10. Effluent Storage, Pumping, and Disposal 58
4.11. Existing Components to Retain and Relocate....59
5. Environmental Effects 60
5.1. Stormwater Management and Site Drainage....60
5.2. Air Quality Management....60
5.3. Odor Control 60
5.4. Noise Control 60
5.5. Public Accessibility....61
5.6. Proximity to Existing and Proposed Residential Areas 61
5.7. Lighting 61
5.8. Aerosol Drift 61
6. Operation and Control Strategy 62
6.1. Prevention of Process Failures 62
6.1.1. Operational Flexibility....62
6.1.2. Staff Training 63
6.1.3. Process Control, Monitoring, and Instrumentation....63
6.1.4. Operating Protocol for Reclaimed Water Production 64
6.2. Alternative Effluent Disposal System....65
6.3. Class I Reliability Design....66
6.3.1. Electrical System 66
7. Implementation Schedule 67

List of Figures

Figure 1.1 Location of the Existing WWTF and Proposed WRF 13
Figure 1.2 Schematic Flow Diagram of the Existing WWTF Unit Processes.....14
Figure 2.1 Existing Service Area 21
Figure 4.1 Preliminary Site Plan and Layout 34
Figure 4.2 Process Flow Diagram 35
Figure 4.3 Hydraulic Profile 36
Figure 4.4 Hydraulic Profile- Continued.....37

List of Tables

Table 1.1 Guidelines to Permitting Wastewater Facilities Requirements 15
Table 2.1 Historical Wet Weather Flow Summary 19
Table 2.2 Historical Wet Weather Peaking Factors 19
Table 2.3 Historical Dry Weather Flow Summary 19
Table 2.4 Historical Dry Weather Peaking Factors 19
Table 2.5 Historical Influent Constituent Concentration and Loading Data 20
Table 2.6 Projected Wet Weather Flow Summary 22
Table 2.7 Projected Dry Weather Flow Summary 23
Table 2.8 Projected Influent Constituent Concentration and Loading Data 23
Table 3.1 Flow Rate and Mass Loading Design Criteria 31
Table 3.2 Effluent Discharge Basis of Design Criteria 32
Table 4.1 Preliminary Design: Influent Master Lift Station 38
Table 4.2 Preliminary Design: Dual Stage Screening - Initial (First Stage) Screening 39
Table 4.3 Preliminary Design: Dual Stage Screening - Fine (Second Stage) Screening.....40
Table 4.4 Preliminary Design: Grit Removal System 41
Table 4.5 Preliminary Design: Headworks Odor Control 42
Table 4.6 Preliminary Design: Flow Equalization Tank 43
Table 4.7 Preliminary Design: Flow Equalization Aeration Systems 43
Table 4.8 Preliminary Design: Flow Equalization Return Pump Station 44
Table 4.9 Preliminary Design: Biological Treatment Process Tanks 47
Table 4.10 Preliminary Design: Feed Forward Pump Station 49
Table 4.11 Preliminary Design: Biological Treatment Aeration Systems.....49
Table 4.12 Preliminary Design: Membrane Filtration System 52
Table 4.13 Preliminary Design: Chlorine Contact Chambers 55
Table 4.14 Preliminary Design: Aerated Sludge Holding Tank 56
Table 4.15 Preliminary Design: Aerated Sludge Holding Tank Aeration Systems.....56
Table 4.16 Preliminary Design: Effluent Transfer Pump Station 58
Table 4.17 Preliminary Design: Reclaimed Water High Service Pump Station 58
Table 4.18 Existing Components to Retain and Relocate.....59
Table 7.1 Implementation Schedule 67

Abbreviations

AADF	Annual average daily flow
CAS	Conventional Activated Sludge
$cBOD_5$	Carbonaceous Biochemical Oxygen Demand
CEC	Contaminant of Emerging Concern
Cf	Cubic feet
EQ	Equalization
Ft	Feet
gpd	Gallons per day
gph	Gallons per hour
gpm	Gallons per minute
HDPE	High-density polyethylene
HGL	Hydraulic Grade Line
Hp	Horsepower
MBR	Membrane biological reactor
MCL	Maximum Containment Level
MG	Million gallons
MGD	Million gallons per day
MLE	Modified Ludzack-Ettinger
MLR	Mixed liquor return
MLSS	Mixed liquor suspended solids
MMADF	Maximum month average daily flow
MPN	Most Probable Number
NaOCL	Sodium hypochlorite
NPDES	National Pollutant Discharge Elimination System
O&M	Operation and maintenance
PHF	Peak Hour Flow
ppd	Pounds per Day
RAS	Return activated sludge
scfm	Standard cubic feet per minute
sf	Square feet
SRT	Solids retention time
TKN	Total Kjeldhal Nitrogen
TRC	Total residual Chlorine
TSS	Total suspended solids
USEPA	United States Environmental Protection Agency
VFD	Variable Frequency Drive
WAS	Waste Activated Sludge
WRF	Water Reclamation Facility
WWTF	Wastewater Treatment Facility

Flow Definitions

Average Annual Daily Flow (AADF) – The total volume of wastewater flowing into a wastewater facility during any consecutive 365 days, divided by 365 days and expressed in units of Million Gallons per Day (MGD).

Three-month Average Daily Flow (3MADF) – The total volume of wastewater flowing into a wastewater facility during a period of three consecutive months, divided by the number of days in this three-month period and expressed in units of MGD. The three-month average daily flow can also be calculated by adding the three monthly average daily flows observed during this three-month period and dividing by three. The three-month average daily flow is a rolling average.

Maximum Month Average Daily Flow (MMADF) – The total volume of wastewater flowing into a wastewater facility for the month with the highest flow, divided by the number of days in the month and expressed in units of MGD.

Maximum Day Flow (MDF) – The total volume of wastewater flowing into a wastewater facility for the day with the highest wastewater flow during the year and expressed in units of MGD.

Maximum Day Flow – Wet Weather (MDWWF) – The total volume of wastewater flowing into a wastewater facility for the day with the highest wastewater flow during the year and expressed in units of MGD during abnormal wet weather events.

Maximum Day Flow – Dry Wet Weather (MDDWF) – The total volume of wastewater flowing into a wastewater facility for the day with the highest wastewater flow during the year and expressed in units of MGD excluding wet weather events.

Maximum Week Flow (MWF) – The total volume of wastewater flowing into a wastewater facility for seven (7) days with the highest wastewater flow, divided by seven (7) days and expressed in units of MGD.

Minimum 24-hour Flow (M24HF) – The total volume of wastewater flowing into a wastewater facility for the day with the lowest wastewater flow during the year and expressed in units of MGD.

Peak Hourly Flow (PHF) – The wastewater flowing into a wastewater facility for the highest peak hour of the year, expressed as a daily flow and in units of MGD.

Dry Weather Period – Defined as the period when the rainfall and groundwater are low.

Wet Weather Period – Defined as the period when rainfall and groundwater levels are high. Demand for reclaimed water normally declines during wet weather periods. This period is defined in FAC Chapter 62-610: Reuse of Reclaimed Water and Land Application.

Terms

Biological Nutrient Removal (BNR) – The use of microorganisms to remove nutrients from wastewater.

Biological Oxygen Demand (BOD_5) – The biochemical oxygen demand of wastewater during decomposition occurring over a 5-day period. A measure of the organic content of wastewater.

Carbonaceous Biological Oxygen Demand ($cBOD_5$) – The carbonaceous biochemical oxygen demand of wastewater during decomposition occurring over a 5-day period. A measure of the organic content of wastewater.

Cascade Control – Method of control combining two feedback loops, with the output of one controller (the primary controller) adjusting the set-point of a second controller (the secondary controller).

Conventional Activated Sludge (CAS) – Conventional activated sludge systems commonly include an aeration tank and secondary clarifier. Aerobic biomass reduces the biochemical oxygen demand (BOD) and ammonia concentrations in the aeration tank. Biomass then flows to the secondary clarifier, where it is separated into clarified water and thickened biomass by gravity sedimentation. The clarified treated water overflows at the top of the secondary clarifier, and the thickened biomass is recycled to the aeration tank or managed at sludge dewatering facilities.

Clarifier – Also known as a settling tank, removes solids from wastewater by gravity settling or by coagulation.

Denitrification – The biological process by which microorganisms reduce nitrate (NO_3) to nitrogen gas (N_2). Denitrification is typically carried out in unaerated (anoxic) wastewater treatment tanks. The microorganisms use the nitrate for energy and, in the process, release nitrogen gas. The nitrogen gas, a major constituent of air, is released into the atmosphere.

Diffused Air – The technique by which air under pressure is forced into the wastewater process in an aeration tank. The air is pumped into the tank through a perforated pipe and moves as bubbles through the aeration tank.

Disposal – The discharge of effluent to injection wells and other facilities utilized strictly for the release of effluents into the environment.

Disinfection – The selective destruction of pathogens in reclaimed water, wastewater effluents, and residuals.

Effluent – The treated liquid that discharges from a treatment plant after completion of the treatment process.

Influent – The water, wastewater, or other liquid flowing into a reservoir, basin or treatment plant, or any unit thereof.

Membrane Bioreactor – A term used to define wastewater treatment processes where a membrane (e.g. microfiltration or ultrafiltration) is integrated with a biological process − specifically a suspended growth bioreactor. While the CAS process uses a secondary clarifier or settlement tank for solid/liquid separation, an MBR uses a membrane for this function.

Nitrification – The biological process by which aerobic microorganisms oxidize ammonia (ammonium ions, NH_4^+) to nitrite (NO_2) and then nitrate (NO_3). Nitrification is typically carried out in aerated (oxic) wastewater treatment tanks. Enough oxygen must be supplied in the aerated tanks to meet the carbonaceous and nitrogenous demand.

Nutrients – Elements or compounds essential as raw materials for plant and animal growth and development.

Public Access – An area that is intended to be accessible to the general public; such as golf courses, cemeteries, parks, landscape areas, hotels, motels, and highway medians. Public access areas include private property that is not open to the public-at-large, but is intended for frequent use by many persons. Public access areas also include residential dwellings.

Reclaimed water – Water that has received at least secondary treatment and basic disinfection and is reused after flowing out of a domestic wastewater treatment facility.

Residuals – Biosolids. The solid, semisolid, or liquid residue generated during the treatment of domestic wastewater in a domestic wastewater treatment facility, also known as "domestic wastewater residuals" or "residuals." Not included is the treated effluent or reclaimed water from a domestic wastewater treatment plant. Also not included are solids removed from pump stations and lift stations, screenings and grit removed from the preliminary treatment components of domestic wastewater treatment facilities.

Secondary Treatment – The second stage in most wastewater treatment systems in which microorganism consume the organic matter in wastewater. Regulations define secondary treatment as meeting minimum removal standards for BOD, TSS, and pH in the discharged effluents from municipal wastewater treatment facilities.

Sequencing Batch Reactor (SBR) – A fill-and-draw activated sludge system for wastewater treatment. Wastewater is added to a single "batch" reactor, treated to remove undesirable components, and then discharged. Equalization, aeration, nitrification, denitrification, and clarification can all be achieved using a single batch reactor. Typically requires post-equalization.

Tertiary Filtration – Tertiary filtration provides a final treatment stage to raise effluent quality before it is discharged to the receiving environment. Tertiary treatment is commonly used as a Reclaimed Water technology to meet various regulatory guidelines for water re-use projects. Filtration processes are typically either depth (or packed-bed) filtration or surface filtration. Depth filtration involves the removal of residual suspended solids by passing the liquid through a filter bed comprised of a granular filter medium (e.g., sand). Surface filtration involves the removal of particulate material by mechanical sieving as the liquid passes through a thin septum (i.e., membrane, cloth, or metal medium). Filtration does not remove dissolved solids.

Total Kjeldahl Nitrogen (TKN) – The sum of free ammonia and organic nitrogen compounds in water or wastewater, expressed as elemental nitrogen, N.

Total Suspended Solids (TSS) – Total suspended solids include all particles suspended in water which will not pass through a filter.

Variable Frequency Drive (VFD) – A variable frequency drive is used for adjusting the pumped flow to the actual demand. It controls the frequency of the electrical power supplied to the pump. Significant power savings can be achieved when using a VFD. Also known as adjustable speed drives.

Appendices

Appendix A Preliminary Biological Process Design Calculations and Mass Balance

Appendix B Existing Deep Injection Well, Reject Ground Storage Tank, and Generator Record Drawings

1. INTRODUCTION

1.1. Existing Facility History and Background

The City's first wastewater treatment system was constructed in 1958 and has subsequently undergone several modifications. The original treatment facility design consisted of a trickling filter wastewater treatment facility with effluent polishing rated at 2.20 MGD. The facility was upgraded in 1977 to a complete mix activated sludge wastewater treatment facility. The trickling filter and effluent polishing facilities were abandoned after the new activated sludge system was placed in service. Mechanical screening and grit handling systems were completed in 1990.

Public access reclaimed water facilities were added in 1992, including effluent sand filtration, high level disinfection facilities, reclaimed water transfer pumping, 3.0 MG ground storage tank, and a reclaimed water high service pump station. A solids handling system upgrade was completed in 1996, including waste activated sludge pumps, rotary drum thickeners, sludge transfer pumps, aeration blowers, modifications of existing tankage, polymer storage and feeding facilities, caustic soda storage and feed system, and odor control equipment associated with a biofilter. Other improvements made in 1996 include new mechanical bar screens, grit collector, effluent dechlorination, and a 5.0 MG reclaimed water storage tank.

To replace the City's surface water discharge point used during periods of wet weather or process upsets, in 2009 the City constructed a deep injection well system including a Class I underground injection well rated at 9.72 MGD PHF, 3.0 MG wet weather and process upset water storage tank, and 24-inch transfer pipeline from the existing WWTF site to the deep injection well site located near the City's existing WTP. In addition, the project included the conversion of a potable water ground storage tank to a reclaimed water storage facility with an accompanying booster pump station. As a result of this improvement, all effluent discharges to the Indian River Lagoon from the WWTF have ceased.

In 2018, the City constructed a new biosolids processing facility that included an EPA approved Class B biosolids chemical stabilization system (BCR Clean B), centrifuge dewatering system, and biosolids processing/truck loading building. The existing WWTF has the ability to waste directly to the biosolids processing facility or aerated sludge holding tanks.

In summary, the existing WWTF uses a conventional activated sludge process to treat domestic wastewater (See ***Figure 1.1*** for location map). Two aeration basins, employing fine bubble diffused aeration, are used to oxidize soluble organic matter. Currently, the operating permit does not require nutrient removal. Two secondary clarifiers provide liquid-solids separation. The existing WWTF utilizes continuously backwashed upflow granular filtration and gas chlorination for high level disinfection to produce Part III slow-rate public access reclaimed water (R-001) in accordance with Chapter 62-610, FAC. Surplus reclaimed water produced during periods of wet weather and low consumer demand or substandard reclaimed water that does not meet applicable quality standards, is disposed of by deep well injection (U-001) in accordance with Chapter 62-600, FAC located in the vicinity of the City's existing Water Treatment Plant (WTP) site. A schematic flow diagram of the existing WWTF is shown in ***Figure 1.2***.

1.2. Project Background

Although the existing WWTF has been upgraded multiple times, the existing treatment process relies on equipment that is nearing the end of its useful life and was not originally designed for biological nutrient removal or advanced wastewater treatment (AWT). Advanced wastewater treatment will typically yield a finished effluent that has limits of 5 mg/L $cBOD_5$, 5 mg/L Total Suspended Solids (TSS), 3 mg/L Total Nitrogen (TN), and between 0.1 and 1.0 mg/L Total Phosphorus (TP). Additionally, the existing WWTF is located on the Intracoastal, near the heart of the City, which is generally not an ideal location for a wastewater treatment facility due to nuisance odors and noise proximate to residential and commercial facilities. The existing location has limited space to provide advanced treatment and/or increased treatment capacity.

Therefore, the City is relocating their wastewater treatment capabilities to an alternative location near the City's existing WTP (See ***Figure 1.1*** for location map). This location is more conducive to wastewater treatment processes with:

- Larger setbacks from residential and commercial facilities;
- More space for advanced treatment facilities and capacity expansion;
- Existing deep injection well located near the relocated WRF site;
- Existing wastewater collection system infrastructure already in place that can discharge the City's wastewater at the relocated WRF site and;
- Existing reclaimed water distribution infrastructure already in place near the relocated WRF site for connection to the City's existing reclaimed water distribution system.

Figure 1.1 Location of the Existing WWTF and Proposed WRF

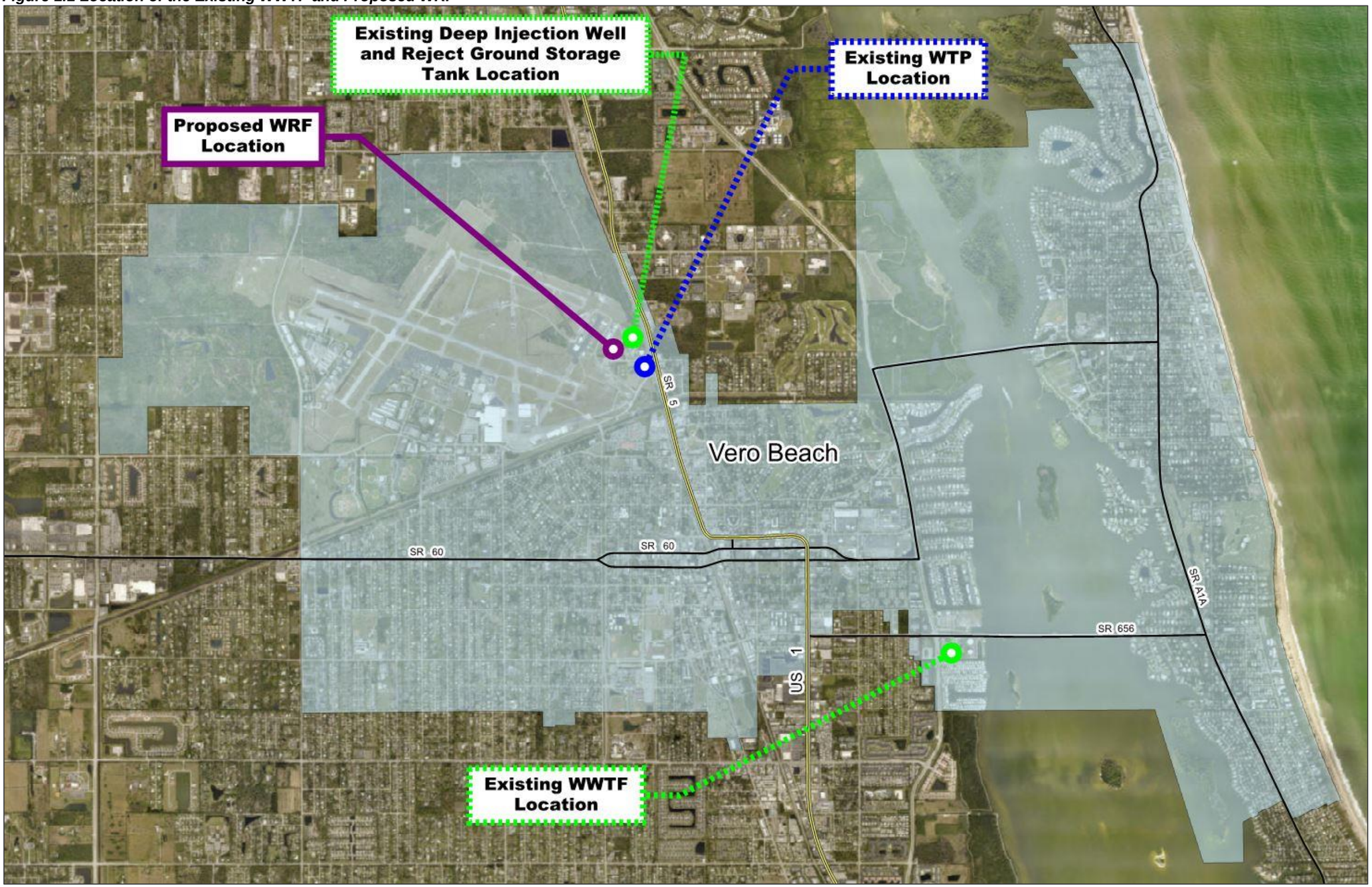

Figure 1.2 Schematic Flow Diagram of the Existing WWTF Unit Processes

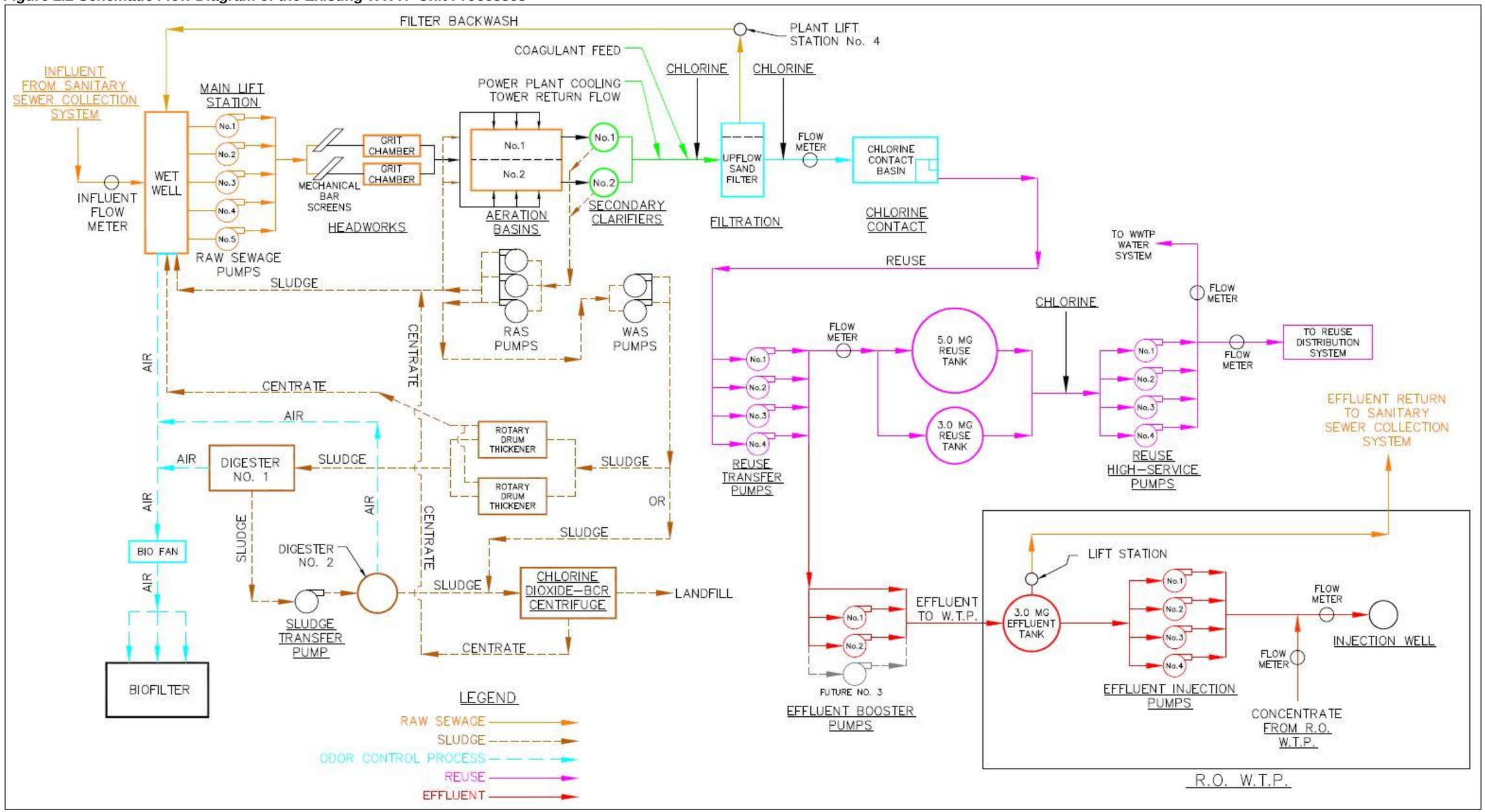

1.3. Purpose

This Preliminary Design Report (PDR) is submitted to the Florida Department of Environmental Protection (FDEP) in support of the domestic wastewater facilities permit application for the construction and operation of a new, relocated Water Reclamation Facility (WRF). The purpose of this PDR is to describe the proposed facility and demonstrate that the proposed facility will be reasonably expected not to cause or contribute to a violation of water quality standards. The PDR has been written in accordance with the FDEP *Guidelines to Permitting Wastewater Facilities or Activities under Chapter 62-620 FAC (Effective July 9, 2006)*.

1.4. Permitting Wastewater Facilities Requirements

To facilitate the regulatory review process, the required information from the *Guidelines to Permitting Wastewater Facilities* is summarized in ***Table 1.1*** with applicable PDR sections referenced:

Table 1.1 Guidelines to Permitting Wastewater Facilities Requirements

FDEP Guidelines to Permitting Wastewater Facilities Requirements	Reference Section
Population - current and design year projections for the population to be served	Section 2.3
Description and map of service area and land use projections for the current and design Years	Section 2.1
Forecasts of flow and wastewater characteristics for current and design years of:	
Physical, chemical, and biological characteristics and concentrations;	Section 2.2 Section 2.4
Wastewater flow patterns described in terms of maximum monthly average daily flow, three-month average daily flow, annual average daily flow, maximum daily flow, minimum 24-hour flow and peak hourly flow during current and design years;	Section 2.2 Section 2.4
Domestic, industrial, and infiltration/inflow contributions	Section 2.2 Section 2.4
Site plan showing operations and unit processes; 100-year and 25-year flood elevations; approximate finish elevations for all major treatment units, pumping stations, and sanitary manholes; and a stormwater management plan;	Figure 4.1 Figure 4.3 Section 5.1
An assessment of environmental effects of the project, including odor and noise control, public accessibility, proximity to existing and proposed residential areas, flood protection, lighting, and aerosol drift	Section 5.0

FDEP Guidelines to Permitting Wastewater Facilities Requirements	Reference Section
Disposal methods or reuse options selected;	Section 4.10 Section 6.2
Required levels of treatment;	Section 3.3;
Selected treatment processes;	Section 4.0;
Technical information and design criteria for treatment facilities, including:	
Hydraulic and organic loadings - minimum, average, and maximum quantities for the liquid and solids treatment processes	Section 2.4
Flow metering and sampling provision	Section 4.2.2 Section 4.2.3
Recycle flows within the treatment plant	Section 4.5
Chemical addition facilities, including disinfection and technical information addressing dechlorination, if applicable	Section 4.8
Removals, reclaimed water or effluent concentrations with separate tabulation for each unit handling solid and liquid fractions with supporting data including design calculations –	Appendix A, Preliminary Biological Treatment Process Design Calculations and Mass Balance
Documentation supporting chlorine doses and residuals and contact times used as the basis of design, if chlorine is used for disinfection, and –	Section 4.8
Residuals treatment, management, and disposal including on-site storage needs or alternate disposal methods –	Section 4.9 Section 4.11
Process diagrams, including: Expected dimensions of unit operations and processes, capacities and volumes,	
Process configuration,	See Figure 4.2
Hydraulic profile,	See Figure 4.3 and 4.4

FDEP Guidelines to Permitting Wastewater Facilities Requirements	Reference Section
Organic loading profile,	Appendix A, Preliminary Biological Treatment Process Design Calculations and Mass Balance
Solids profile,	Appendix A, Preliminary Biological Treatment Process Design Calculations and Mass Balance
Solids control system, and	Appendix A, Preliminary Biological Treatment Process Design Calculations and Mass Balance
Flow diagram with capacities;	Appendix A, Preliminary Biological Treatment Process Design Calculations and Mass Balance
Operation and control strategies included for prevention of upsets	Section 6.1;
Alternate disposal methods	Section 6.2,
Reliability classification and features	Section 6.3;
Design information for outfalls discharging to coastal or open ocean waters	Not Applicable
Design information for all outfalls discharging to surface waters –	Not Applicable
Additional requirements for the preliminary design report are:	
For reuse of reclaimed water and land application systems –	No changes proposed to the reclaimed water system.
For new Class I and V underground injection facilities or modification of such facilities –	No new underground injection facilities or modifications proposed
For residuals management and land application –	No changes proposed, existing process and equipment to be retained and relocated
For wetlands treatment and discharge systems –	Not Applicable

2. EXISTING AND DESIGN WASTEWATER FLOWS AND CHARACTERISTICS

2.1. Existing Wastewater Treatment

The City's current wastewater service area encompasses the City of Vero Beach, the Town of Indian River Shores to the north of the city and a portion of unincorporated Indian River County south of the city limits on the barrier island. See ***Figure 2.1*** for the wastewater service area for the existing WWTF.

The City is currently authorized to operate under the FDEP Wastewater Permit No. FLA021661. The existing WWTF is currently rated and permitted for 4.5 MGD on an annual average daily flow (AADF) basis and 5.44 MGD on a three-month average daily flow (TMADF) basis. The WWTF has two effluent disposal methods:

- R-001, Part III public access reuse system for unrestricted irrigation with a permitted capacity of 4.5 MGD AADF
- U-001, Class I underground injection well with a permit for 9.72 MGD PHF

2.2. Historical Wastewater Flows and Characteristics

Knowledge of flow and loading variations are important for assessing existing treatment unit processes and planning for new facilities. Historical wastewater flow and loading data for the period from February 2015 through May 2018 were analyzed. The data was processed and filtered to determine historical dry and wet weather flows, influent constituent concentrations, influent loadings, and peaking factors. Flow variations are typically expressed in terms of the ratio relative to AADF, commonly referred to as peaking factors. Peaking factors of interest in the design and evaluation of treatment facilities include MMADF, MDF, and MWF.

Raw wastewater 5-day biochemical oxygen demand (cBOD5), total suspended solids (TSS) concentrations (milligrams per liter [mg/L]), total Kjeldahl Nitrogen (TKN) and the associated mass loadings (pounds per day [lb/day]) were analyzed to determine existing influent concentrations and loadings. The current influent flows and loadings are within the current design treatment capacity of the WWTF.

See ***Table 2.1*** for a summary of historical wet weather flow and ***Table 2.2*** for a summary of wet weather peaking factors.

Table 2.1 Historical Wet Weather Flow Summary

AADF: Annual Average Daily Flow	3.56 MGD
3MADF: Three-Month Average Daily Flow	4.45 MGD
MMADF: Maximum Month Average Daily Flow	5.21 MGD
MDF: Maximum Daily Flow	8.91 MGD
MWF: Maximum Week Flow	7.79 MGD
M24HF: Minimum 24-Hour Flow	2.06 MGD
PHF: Peak Hourly Flow (estimate)	10.68 MGD

Table 2.2 Historical Wet Weather Peaking Factors

3MADF:AADF	1.25
MMADF:AADF	1.46
MDF:AADF	2.50
MWF:AADF	2.19
M24HF:AADF	0.58
PHF:AADF (estimate)	3.00

See ***Table 2.3*** for a summary of historical dry weather flow and ***Table 2.4*** for a summary of dry weather peaking factors.

Table 2.3 Historical Dry Weather Flow Summary

AADF: Annual Average Daily Flow	3.50 MGD
3MADF: Three-Month Average Daily Flow	4.45 MGD
MMADF: Maximum Month Average Daily Flow	4.71 MGD
MDF: Maximum Daily Flow	5.85 MGD
MWF: Maximum Week Flow	5.55 MGD
M24HF: Minimum 24-Hour Flow	2.06 MGD
PHF: Peak Hourly Flow	10.50 MGD

Table 2.4 Historical Dry Weather Peaking Factors

3MADF:AADF	1.27
MMADF:AADF	1.35
MDF:AADF	1.67
MWF:AADF	1.59
M24HF:AADF	0.58
PHF:AADF (estimate)	3.00

See ***Table 2.5*** for a summary of historical influent constituent concentration and loading data.

Table 2.5 Historical Influent Constituent Concentration and Loading Data

Influent Constituent Data[1]	Low	High	Average
$cBOD_5$ – Concentration (mg/L)	59	294	163
$cBOD_5$ – Loading (lbs/day)	2,110	7,866	4,663
TSS – Concentration (mg/L)	57	244	137
TSS – Loading (lbs/day)	2,001	6,896	3,971
NH_4-N (mg/L)	0	82	22
TKN (mg/L)	14	87	33
NO_3-N (mg/L)	-	-	-
Total Nitrogen – Concentration (mg/L)	3	56	32
Total Nitrogen – Loading (lbs/day)	95	1,419	920
Temperature (deg C)	20	32	27

[1] The influent constituent low, high, and average concentration data do not typically occur on the same day or flow conditions.

Figure 2.1 Existing Service Area

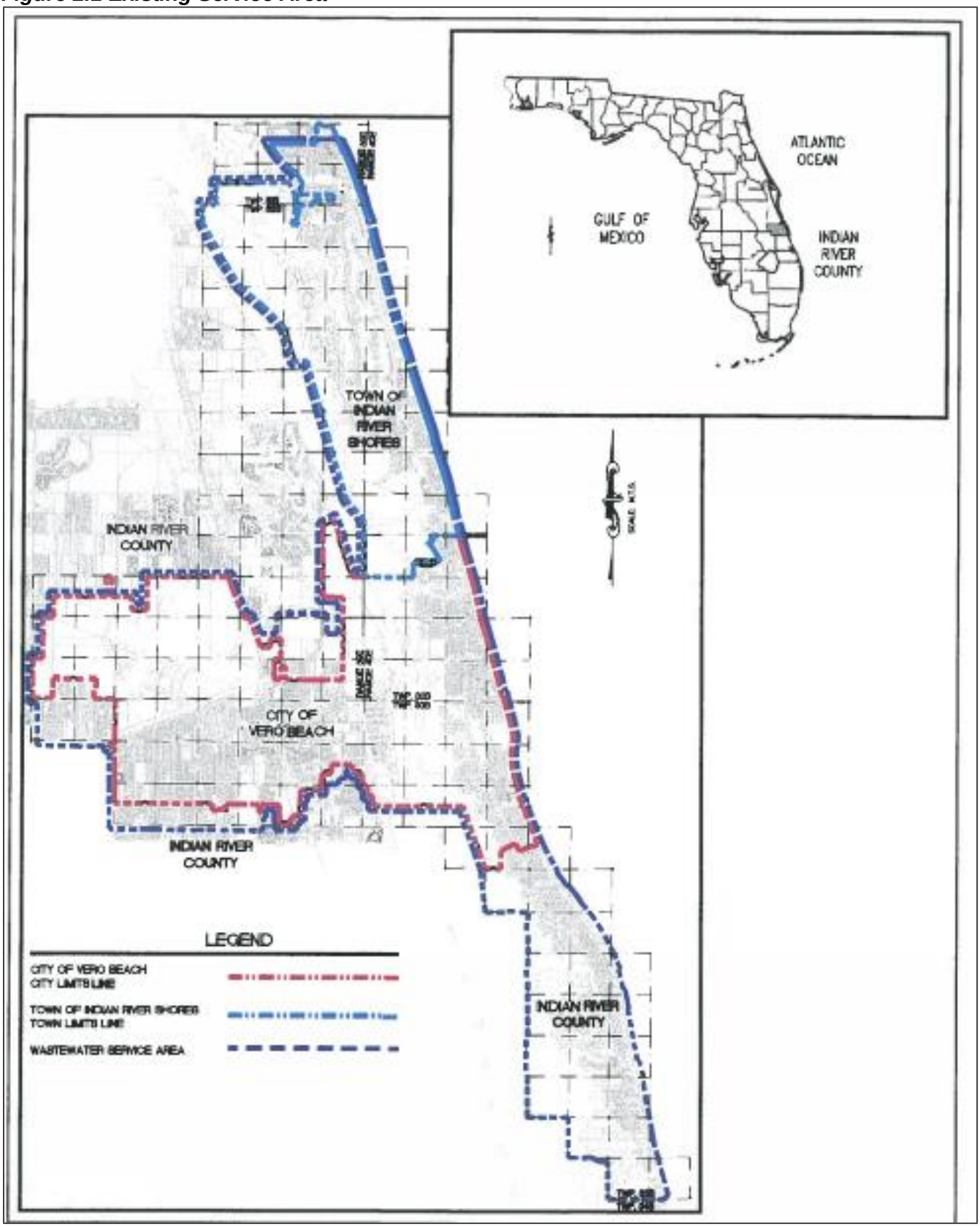

2.3. Current and Project Population Projections

Based on the current projected population of the service area and ten-year projected flows, the projected AADF and TMADF for the existing WWTF will not meet or exceed the permitted plant capacity within the next five years, or within the ten-year projection presented in this capacity analysis. There is no plan for the existing WWTF treatment capacity to be expanded. Reference the recent *City of Vero Beach Water and Sewer Department Wastewater Treatment Facility Capacity Analysis Report* dated April 2019 and submitted with the 2019 operating permit renewal application for the detailed population projections and ten-year projected flows.

2.4. Proposed Design Wastewater Flow and Loading Conditions

The historical flow and loading conditions were previously presented in ***Section 2.2.*** Based on the City's existing service area, the relocated WRF will receive the same existing wastewater flows from the residential and commercial users. The existing wastewater generated within the commercial centers include contributions from schools, colleges, restaurants, retail centers, parks, and offices. Existing flow contributions from Infiltration/Inflow (I/I) are anticipated to continue since sections of the service area consists of older sewer collection system infrastructure. Overall, the influent wastewater characteristics of the relocated WRF are expected to be similar to those found in the existing WWTF.

The following section summarizes the projected influent flow rates and mass loading conditions that were used for the relocated WRF treatment design criteria. It should be noted that the projected flow rates and mass loading conditions were based solely on historical data with a relocated WRF permitted capacity of 5.0 MGD AADF. The historical wet weather and dry weather peaking factors were used for the projected peaking factors (See ***Table 2.2*** and ***Table 2.4***).

See ***Table 2.6*** for a summary of projected wet weather flow and ***Table 2.7*** for a summary of wet weather peaking factors used for the relocated WRF treatment design criteria.

Table 2.6 Projected Wet Weather Flow Summary

AADF: Annual Average Daily Flow	5.00 MGD
3MADF: Three-Month Average Daily Flow	6.24 MGD
MMADF: Maximum Month Average Daily Flow	7.31 MGD
MDF: Maximum Daily Flow	12.49 MGD
MWF: Maximum Week Flow	10.93 MGD
M24HF: Minimum 24-Hour Flow	2.89 MGD
PHF: Peak Hourly Flow (estimate)	15.00 MGD

Table 2.7 Projected Dry Weather Flow Summary

AADF: Annual Average Daily Flow	5.00 MGD
3MADF: Three-Month Average Daily Flow	6.37 MGD
MMADF: Maximum Month Average Daily Flow	6.74 MGD
MDF: Maximum Daily Flow	8.36 MGD
MWF: Maximum Week Flow	7.94 MGD
M24HF: Minimum 24-Hour Flow	2.95 MGD
PHF: Peak Hourly Flow	15.00 MGD

See ***Table 2.8*** for a summary of projected influent constituent concentrations and loading data used as the relocated WRF treatment design criteria.

Table 2.8 Projected Influent Constituent Concentration and Loading Data

Influent Constituent Data	Low	High	Average
$cBOD_5$ – Concentration (mg/L)	175	290	233
$cBOD_5$ – Loading (lbs/day)	7,298	12,093	9,695
TSS – Concentration (mg/L)	150	240	195
TSS – Loading (lbs/day)	6,255	10,008	8,132
Total Nitrogen – Concentration (mg/L)	40	50	45
Total Nitrogen – Loading (lbs/day)	1,668	2,085	1,877
pH	6.5	8.0	7.0
Temperature (deg C)	20	32	26

3. BASIS OF DESIGN CRITERIA

Summarized in this section are the regulatory and treatment process basis of design criteria developed to ensure compatibility with the proposed equipment, treatment processes and regulatory requirements to produce an effluent that readily meet and exceed the requirements for public access reclaimed water.

3.1. Regulatory Basis of Design Criteria

This section reviews and summarizes the current and potential future rules and regulations associated with the City's wastewater treatment.

3.1.1. Florida Department of Environment Protection Requirements

The Florida Department of Environment Protection (FDEP) is the agency that has the regulatory authority for wastewater treatment and disposal in the State of Florida. The relocated WRF will meet the rules and regulations for the domestic wastewater treatment and effluent disposal as required by the United States Environmental Protection Agency (USEPA) and FDEP. The primary Florida Administrative Code (FAC) Rules and Regulations applied to the planning, design, and construction of relocated WRF will include:

- Chapter 62-4: Permits
  - Establishes fees and procedures to obtain a permit.
- Chapter 62-160: Quality Assurance
  - Defines the minimum field and laboratory quality assurance, methodological and reporting requirements of the Department.
- Chapter 62-522: Ground Water Permitting and Monitoring Requirements
  - Establishes permitting and groundwater monitoring requirements, including zones of discharge, for installations discharging to ground water.
- Chapter 62-528: Underground Injection Control
  - Establishes criteria for the construction and operation of injection wells.
- Chapter 62-600: Domestic Wastewater Facilities
  - Provides minimum standards for the design and operational criteria of domestic wastewater facilities.
  - Establishes minimum treatment requirements for domestic wastewater facilities.
  - Establishes criteria for High-level disinfection:
    - Sample shall not exceed 5.0 mg/L of TSS at a point before application of the disinfectant
    - Total chlorine residual of at least 1.0 mg/L shall be maintained at all times. The minimum acceptable contact time shall be 15 minutes at the peak hourly flow.

- Chapter 62-601: Domestic Wastewater Treatment Plant Monitoring
    - Establishes minimum requirements for monitoring of domestic wastewater facilities.
- Chapter 62-610: Reuse of Reclaimed Water and Land Application
    - Defines reuse as the deliberate application of reclaimed water, in compliance with Department rules, for a beneficial purpose.
    - Provides a comprehensive and detailed set of requirements for the design and operational criteria of a wide range of reuse and land application systems consistent with EPA's *Guidelines for Water Reuse*.
- Chapter 62-620: Wastewater Facility Permitting
    - Establishes the procedures to obtain a permit to construct, operate or modify domestic and industrial wastewater facilities.
    - Includes requirements for establishing permit limitations and conditions.
    - Contains requirements for monitoring and reporting after the permit is issued.
- Chapter 62-640: Domestic Wastewater Biosolids
    - Defines Biosolids as the solid, semisolid or liquid residue generated during the treatment of domestic wastewater in a domestic wastewater treatment facility but not including solids removed from pump stations and lift stations or screenings and grit removed from the preliminary treatment components of domestic wastewater treatment facilities.
    - Regulates the beneficial use of biosolids in Florida, including the distribution and marketing of biosolids and the land application of biosolids.
- Chapter 62-699: Treatment Plant Classification and Staffing
    - Establishes minimum staffing requirements for facilities based on capacity and type of treatment process utilized by the facility.

The relocated WRF preliminary design includes compliance with the FAC Chapter requirements associated with treating, storing, delivering Part III public access reclaimed water, disposal of substandard effluent water that does not meet the requirements for Part III public access reclaimed water utilizing deep well injection or disposal of treated effluent when reuse demands do not support the generated flows, and the necessary treatment to produce a minimum of Class B biosolids. Adequate storage is included in the preliminary design for both the public access reclaimed water and utilizing the existing substandard effluent (reject water) ground storage tank.

In addition, the relocated WRF preliminary design anticipates future trends in wastewater policies that may impose new challenges on wastewater treatment practices. For instance, in the State of Florida, there is a concern that stringent nutrient (nitrogen and phosphorus) limits will be imposed or increased on reclaimed water land applied in a way that can increase nutrient concentrations in runoff and/or surface water. Therefore, included in the basis of design criteria are future nitrogen and/or phosphorus limits that may be imposed on the City's public access reclaimed water.

3.1.2. USEPA Reliability Requirements

The *USEPA Technical Bulletin of Design Criteria for Mechanical, Electrical, and Fluid System and Component Reliability* is a document referenced by FAC Chapter 62-610 to define reliability

requirements for wastewater treatment facilities. This Technical Bulletin (1) suggests guidelines for three reliability classes of wastewater treatment facilities, as described below; (2) establishes minimum standards for reliability of mechanical, electrical, and fluid systems and components; and (3) provides reliability design criteria for wastewater treatment facilities.

- Class I: Chapter 62-610.462(1) requires Class I reliability for wastewater treatment facilities that provide reclaimed water for Part III public access reuse systems unless a permitted alternate treatment or discharge system exists which has sufficient capacity to handle any reclaimed water flows which do not meet the performance criteria established in the operating protocol.

- Class II: Discharge into waters that could not be permanently or unacceptably damaged by short-term effluent quality degradations but could be damaged by continued (on the order of several days) effluent quality degradation.

- Class III: Discharges not otherwise classified as Reliability Class I or Class II.

In accordance with Chapter 62-610.462(1), the relocated WRF is required to meet Class III reliability standards since a permitted alternate discharge system (U-001 with 3.0 MG reject storage tank) has sufficient capacity to handle any Part III public access reuse water flows which do not meet the performance criteria established in the operating protocol. However, the relocated WRF basis of design criteria includes compliance with Class I reliability standards. The basis of design includes redundancy of treatment processes with mechanical equipment out of service, multiple treatment units for all unit processes, resilience considerations, and an emergency generator for uninterrupted power service.

See ***Section 6.3*** for the discussion of the proposed design and operational measures utilized to meet Class I Reliability requirements.

3.1.3. National Pollutant Discharge Elimination System Program

The National Pollutant Discharge Elimination System (NPDES), established by EPA, is a permitting program that establishes requirements for wastewater effluent discharge to surface water bodies. The NPDES is enforced through monitoring and reporting. NPDES permits are site specific discharge standards that incorporate Federal Clean Water Act mandates and Florida Surface Water Quality Standards.

The City is currently planning to discharge all treated effluent primarily to the existing Part III public access reclaimed water system and utilize the existing deep well injection system only when the effluent does not meet the requirements for Part III public access reclaimed water or the reuse demands do not support the generated flows. The City does not have current plans to discharge effluent to a surface water body; therefore, an NPDES permit is not required and the numerical standards associated with the surface water discharge does not need to be met. However, the

basis of design criteria and proposed wastewater treatment technology will be able to meet reasonable nutrient standards, including phosphorous limitations, if necessary, in the future.

3.1.4. Biosolids Management

The FDEP is responsible for enforcing the *40 CFR Part 503, Standards for the Use or Disposal of Sewage Sludge*, in Florida. Beyond this jurisdiction, there are no formal restrictions for the land application of biosolids in the State of Florida. However, a number of counties in Florida, including Indian River County, have implemented full or partial moratoriums of Class B biosolids land application. Others have restricted the application of biosolids entirely - regardless of their classification. Based on the continually changing status of regulations associated with biosolids disposal, any decisions regarding long-term biosolids management practices must carefully consider the dynamics of local biosolids regulations. These changing regulations, and the resulting availability of application sites, can ultimately have significant impacts on the potential applicability of various biosolids management options.

Currently, biosolids from the existing WWTF are stabilized on-site by chemical addition (chlorine dioxide) to meet Class B standards, dewatered using an on-site centrifuge, and then hauled by a private contractor and land applied at permitted land application sites. The currently permitted biosolids management process, including stabilization and dewatering equipment, is adequately sized for the proposed 5.0 MGD AADF design flow and loadings. The biosolids management equipment will be relocated to the proposed WRF location with no change to the currently permitted biosolids management process anticipated, besides relocating equipment, at this time.

3.1.5. Stormwater Management

Stormwater that will be generated from the impervious site improvements (i.e., roadway, process tankage, etc.) will be naturally drained to existing stormwater retention and detention basins that are located throughout the existing site. Where possible, grassed swales and infiltration will be encouraged to reduce hard piping that may conflict with other facility yard piping.

3.2. Treatment Process Basis of Design Criteria

3.2.1. Design Criteria for Biological Nutrient Removal

During secondary treatment (i.e. carbonaceous BOD removal), some amount of nitrogen and phosphorus is removed by way of biomass cell growth and wasting from the process. However, secondary treatment is not generally sufficient to reliably achieve stringent nitrogen or phosphorus effluent requirements. Typically, biological and/or chemical treatment processes are utilized to achieve the level of treatment required for acceptable nutrient reduction.

As discussed in ***Section 3.1.1***, it is anticipated that future nitrogen and/or phosphorus limits may be imposed on the City's public access reclaimed water. Therefore, the following basis of design Total Nitrogen (TN) and Total Phosphorus (TP) removal levels are included in the treatment process basis of design criteria.

Level 1: Effluent Total Nitrogen Limit of 7 to 8 mg/l (annual average) - Level 1 nitrogen limits can be achieved biologically through a number of activated sludge or attached growth

processes. Supplemental carbon is required for denitrification filtration. These processes typically include:

- Modified Ludzack-Ettinger (MLE)
- Extended Aeration Oxidation Ditches
- Sequencing Batch Reactors (SBR)
- Cyclic Aeration processes
- Moving Bed Biofilm Reactor (MBBR)
- Integrated Fixed Film Activated Sludge (IFAS)
- Membrane Bioreactors (MBR)
- Deep-Bed Denitrification Filtration

Level 2: Effluent Total Nitrogen Limit of 3 to 5 mg/l (annual average) - Level 2 nitrogen limits, generally referred to as Advanced Wastewater Treatment (AWT), can be achieved biologically through a number of activated sludge or attached growth processes. The lower end of Level 2 is considered the current limit of technology. Based on the influent wastewater characteristics, supplemental carbon is typically required for the secondary anoxic bioreactors. Supplemental carbon is required for denitrification filtration. The processes typically include:

- 4-Stage Bardenpho (MLE with secondary anoxic and re-aeration zones)
- Deep-Bed Denitrification Filtration

Phosphorus Removal

Currently, there are no phosphorus limits associated with the City's WWTF discharge. However, there is a concern that phosphorus limits could be imposed on reclaimed water that contributes to phosphorus runoff to surface water. Alum or ferric chloride addition (chemical treatment) and the 5-Stage Bardenpho process (biological treatment) can typically produce an effluent with a total phosphorous (TP) concentration of less than 1 mg/L.

The chemical treatment for phosphorus removal involves the addition of metal salts to react with soluble phosphate to form solid precipitates that are removed by liquid-solids separation processes, such as secondary clarification, dissolved air flotation, tertiary filtration, or membrane filtration. The most common metal salts used are in the form of alum (aluminum sulfate), poly-aluminum chloride (PAC), and ferric chloride.

The biological treatment for phosphorous removal typically includes an initial anaerobic zone that promotes the release and subsequent uptake of phosphorus by the microorganism population. For example, the 5-Stage Bardenpho process consists of an anaerobic zone followed by the 4-stage Bardenpho process to remove both nitrogen and phosphorus.

Summary of Design Criteria for Biological Nutrient Removal

The relocated WRF treatment process basis of design includes the ability to achieve both Level 1 and Level 2 nitrogen removal capabilities based on current regulatory trends toward more stringent effluent total nitrogen limits and provide the City operational flexibility in implementing an adaptive, season based, nitrogen management approach with respect to public access reclaimed water (i.e. end user irrigation water and nutrient demands).

The relocated WRF treatment process basis of design criteria also includes the ability to provide both chemical phosphorus removal capabilities (chemical precipitation) and/or biological phosphorus removal capabilities (i.e. 5-stage Bardenpho process).

3.2.2. Design Criteria for Tertiary Filtration Technology

The filtration technology will consider the removal efficiency of Giardia cysts and Cryptosporidium oocysts. These two organisms are microscopic parasites that can infect both humans and animals and cause several serious intestinal illnesses. Their tough outer shell protect them from certain filtration and chemical (i.e. chlorination) treatments. Giardia and Cryptosporidium are currently not regulated by the Florida Department of Environmental Protection (FDEP), but potential future regulations should be considered when evaluating filtration technologies. Only established filtration technologies with demonstrated Giardia cysts and Cryptosporidium oocysts removal capabilities were included when developing the relocated WRF treatment process basis of design criteria.

3.2.3. Impacts of Septic Tank Effluent Pump Stations

The City's existing wastewater collection system utilizes Septic Tank and Effluent Pump (STEP) system in certain areas within the City's service territory. The STEP system is very similar to a low-pressure wastewater collection system. The difference is that a STEP system incorporates an on-site septic tank to capture most grit, grease and solids, and retains the sludge and floatable matter, and discharges a liquid effluent. Therefore, the potential decrease in wastewater constituent loading and/or strength from STEP systems were included when developing the relocated WRF treatment process basis of design criteria.

3.2.4. Impacts of Water Conservation

It is expected that water conservation practices will reduce the wastewater flow and increase the wastewater strength over time. Recent experience suggests that communities have encountered an increase in wastewater strength resulting from the use of low-flow plumbing fixtures (i.e., low-flush toilets, low-flow showerheads, etc.) or other behavioral changes (i.e., increased use of garbage disposals, etc.).

If not considered during the original design criteria, the resulting increases in wastewater strength (along with parallel decreases in flow) can pose significant challenges associated with the operation of facilities and can result in facility capacity limitations. Therefore, this factor is included when developing the relocated WRF treatment process basis of design criteria.

3.2.5. Impacts of Industrial Wastes

It is expected that residential and commercial customers, as currently permitted, will remain as the main contributors to the wastewater flow received by the relocated WRF. The City does not

have EPA defined Significant Industrial Users (SIU), as defined in FDEP Rule 62-625.200 discharging flows to the City's existing WWTF. An industrial pretreatment program is not required or anticipated for the City's wastewater service area at this time.

Any future industrial waste discharge may change the wastewater characteristics dramatically. Depending on the type of industry, the impacts on individual water quality parameters may vary. Typically, such discharges may increase the COD and result in a high COD:BOD ratio. This reduces the biological degradable fraction of the wastes and poses a challenge to the biological process. Some types of industries may discharge material that may be toxic and interfere with the biological process. Therefore, the treatment process basis of design criteria will require pretreatment of any new industrial wastewater flows to meet the proposed design loading conditions for the relocated WRF.

3.2.6. Impacts of Resilience Considerations

The resilience of a system, be it natural or engineered, is the inherent (or built-in) ability to accommodate severe and/or drastic fluctuations in the operating conditions and then return to normal levels of service without sustaining permanent damage or change. As wastewater treatment facilities are dynamic operations subject to extreme flows (ex. hurricane), power outages, toxic discharges (chemical or biological), physical damage (accidents), sea level rise, and cyber-attacks, these factors were included when developing the relocated WRF treatment process basis of design criteria. Additionally, the relocated WRF basis of design criteria includes compliance with Class I reliability standards.

3.2.7. Criteria for Flow Rate and Mass Loading Conditions

Establishing appropriate treatment process design criteria for a wide range of probable wastewater conditions, flow rates and mass loadings allows the relocated WRF flexibility and treatment process options to comply with the overall regulatory and treatment requirements. Summarized in ***Table 3.1*** are the treatment process basis of design criteria with respect to each unit process flow rate and mass loading used for the proposed WRF preliminary treatment process design (see Section 4.0).

Table 3.1 Flow Rate and Mass Loading Design Criteria

Element	Flow/Mass Loading Rate	Design/Operation
Hydraulics	Flow Rate: Minimum 24-hour flow (M24HF) Flow Rate: Peak Hour Flow (PHF)	Sizing of pipelines and channels to minimize low-velocity conditions and associated solids deposition, as much as possible. Sizing of pumping facilities, pipelines, and channels. Sizing of physical unit operations: • screening/grit removal • clarifiers • filters • chlorine contact basins Sizing of all unit operations (freeboard).
Biological reactor sizing	Mass Loading: Maximum Month (MMAD)	Sizing of biological treatment systems with the maximum SRT.
Biological reactor oxygen (aeration)	Mass Loading: Maximum Day (MDF)	Sizing of aeration system for the maximum daily demands.
Biological reactor oxygen (aeration)	Mass Loading: Minimum 24-Hour Flow (M24HF)	Sizing of aeration equipment turndown to meet minimum demands and mixing needs.
Biological nutrient removal systems	Mass Loading: Minimum Month Mass Loading: Maximum Month (MMAD)	Design system performance for the minimum month and maximum month wastewater influent characteristics with the maximum and minimum recycle effects. Design for average temperature of the minimum month and maximum month.
Unit equipment sizing	As required	Size equipment to meet both maximum and minimum processing needs where appropriate
Waste solids	Mass Loading: Maximum Month (MMAD)	Design for minimum SRT conditions under maximum monthly loading. Size aerated storage with minimum SRT and average solids concentration.
Solids handling unit processes	As required	Size for the maximum day conditions, taking into consideration the expected operational schedule for the solid equipment.
Chemical Storage and Feed Systems	Flow Rate: Minimum 24-Hour Flow (M24HF) Flow Rate: Peak Hour Flow (PHF)	Design chemical storage and feed system performance for the minimum and maximum treated effluent characteristics. Size feed system for PHF and storage system for 30 days.

3.3. Effluent Discharge Basis of Design Criteria

The overall relocated WRF treatment basis of design was developed to sufficiently and reliably remove pollutants to achieve Part III public access reclaimed water standards with the ability to achieve AWT (i.e. 5/5/3/1) as the regulatory environment changes.

Based on the projected influent flow and loading conditions presented in ***Section 2.4***, the following criteria was used for the proposed WRF treatment process design (see ***Section 4.0***). See ***Table 3.2*** for a summary of the effluent discharge basis of design criteria.

Table 3.2 Effluent Discharge Basis of Design Criteria

$cBOD_5$	≤ 5 mg/L
TSS	≤ 5 mg/L
Level 2 Total Nitrogen (TN) removal	≤ 3 mg/L
Operational flexibility to achieve Level 1 Total Nitrogen (TN), if warranted	≤ 8 mg/L
Operational flexibility to achieve Total Phosphorous (TP) removal, if warranted	≤ 1 mg/L
High level disinfection	Chapter 62-600.440(5), FAC
pH	≥ 6.5 and ≤ 8.5

4. DESCRIPTION OF PROPOSED WATER RECLAMATION FACILITIES

Based on the established basis of design criteria (***Section 3.0***), the proposed relocated WRF will utilize a 5-stage membrane bioreactor (MBR) Bardenpho process with the ability to achieve AWT standards. The MBR process can operate under wide range of mixed liquor suspended solids (MLSS) concentrations (ex. 3,000 mg/L to 12,000 mg/L) while consistently producing a high-quality effluent. The footprint of an MBR facility is smaller than a conventional five-stage Bardenpho process (i.e. process tankage, secondary clarifiers, and tertiary filtration) and an SBR process (i.e. post-treatment equalization and tertiary filtration). This section describes the proposed wastewater treatment unit processes and technologies for treating the pollutants in the City's wastewater to achieve the established Part III public access reclaimed water quality standards and basis of design criteria.

4.1. Unit Process Selection

The relocated WRF will employ treatment technologies designed to provide effluent quality that meets or exceeds local, state and federal regulations for public access reclaimed water applications. The new WRF will have a high degree of reliability and safeguards designed to provide consistent quality under the full range of flow conditions. Treatment processes components include:

- Influent Master Lift Station
- Headworks Structure
    - Dual Stage Screening System
    - Screening Washing and Compaction
    - Grit Removal
- Flow Equalization
- 5-Stage MBR Bardenpho Biological Treatment
- Membrane Filtration (Immersed Membrane Bioreactors)
- High Level Disinfection – Gaseous Chlorine
- Reclaimed Water Storage Pump Station
- Aerated Sludge Holding
- Class B Chemical Stabilization (Relocated from Existing WWTF)
- Centrifuge Biosolids Dewatering (Relocated from Existing WWTF)
- Deep Well Injection (Existing onsite). See Appendix B for record drawings.
- Substandard (Reject) Water Storage (Existing onsite). See Appendix B for record drawings.

Ancillary facilities include odor control, facility wide drain pump stations, operations building, maintenance building, and biosolids management structure. The preliminary site plan and layout is shown on ***Figure 4.1***. The process flow diagram shown on ***Figure 4.2*** provides an overview of the major treatment components. The preliminary hydraulic profile is shown as ***Figure 4.3*** and ***Figure 4.4.*** See ***Appendix A*** for the preliminary biological treatment process design calculations and mass balance.

Figure 4.1 Preliminary Site Plan and Layout

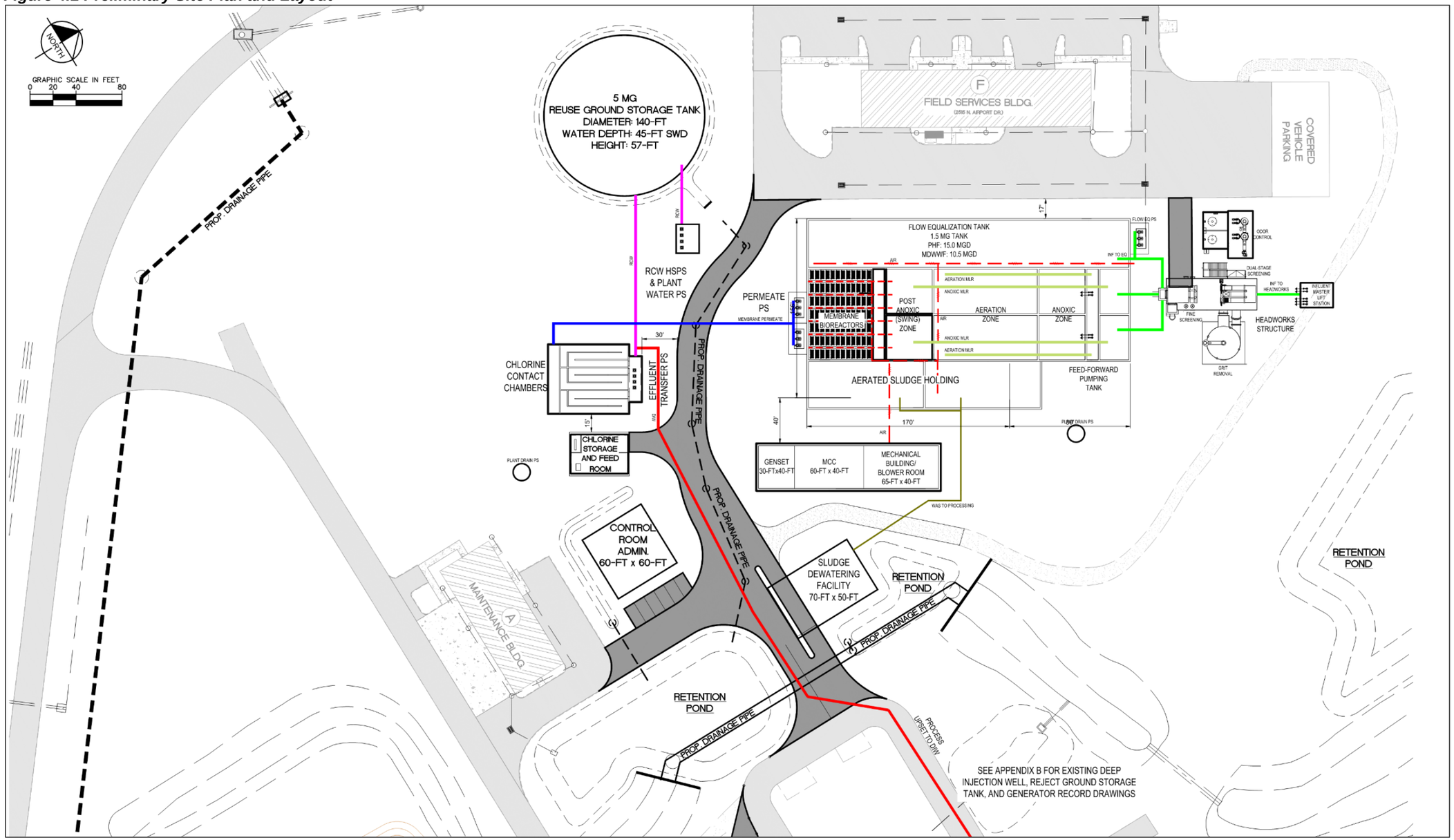

Figure 4.2 Process Flow Diagram

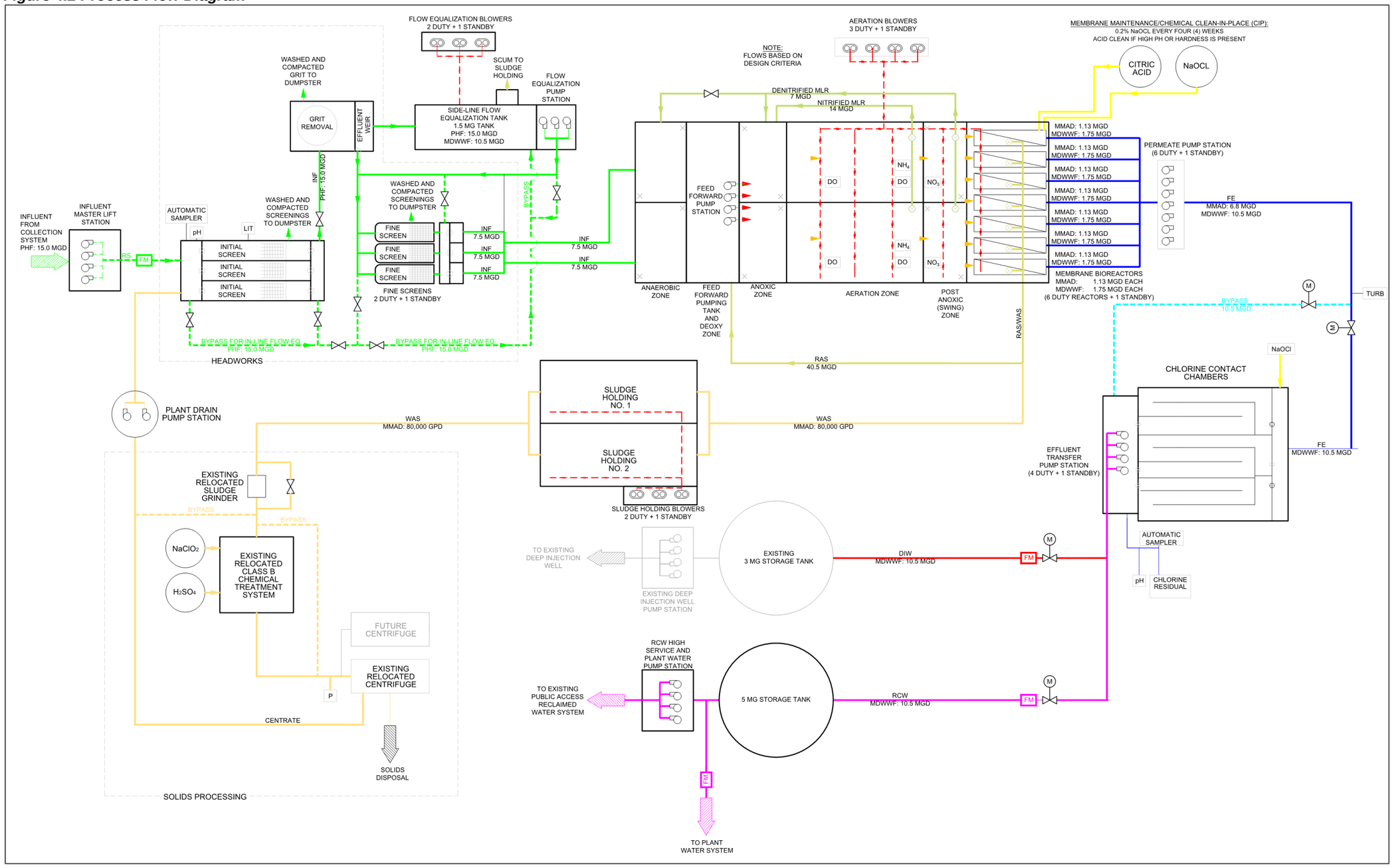

Figure 4.3 Hydraulic Profile

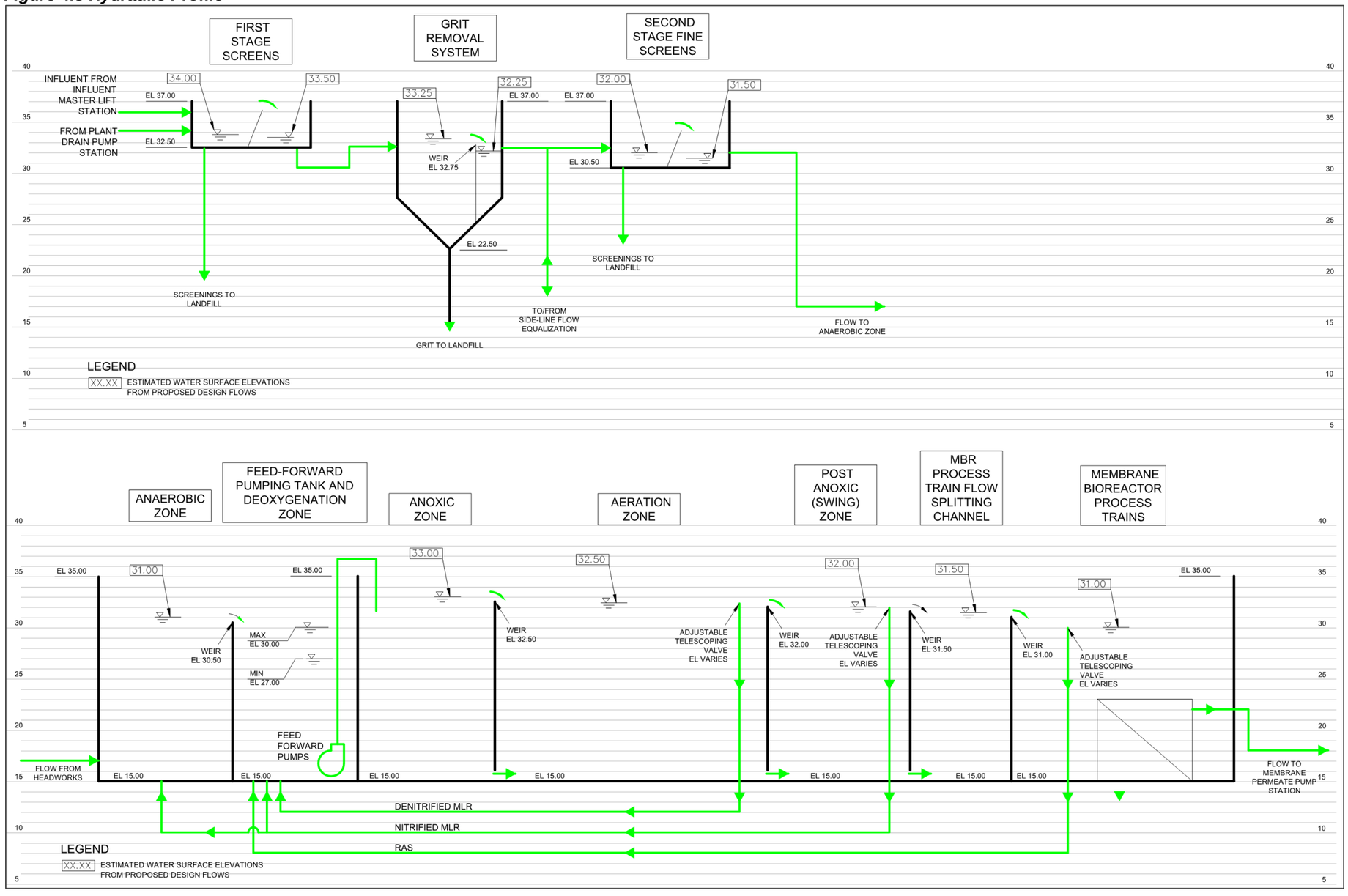

Figure 4.4 Hydraulic Profile- Continued

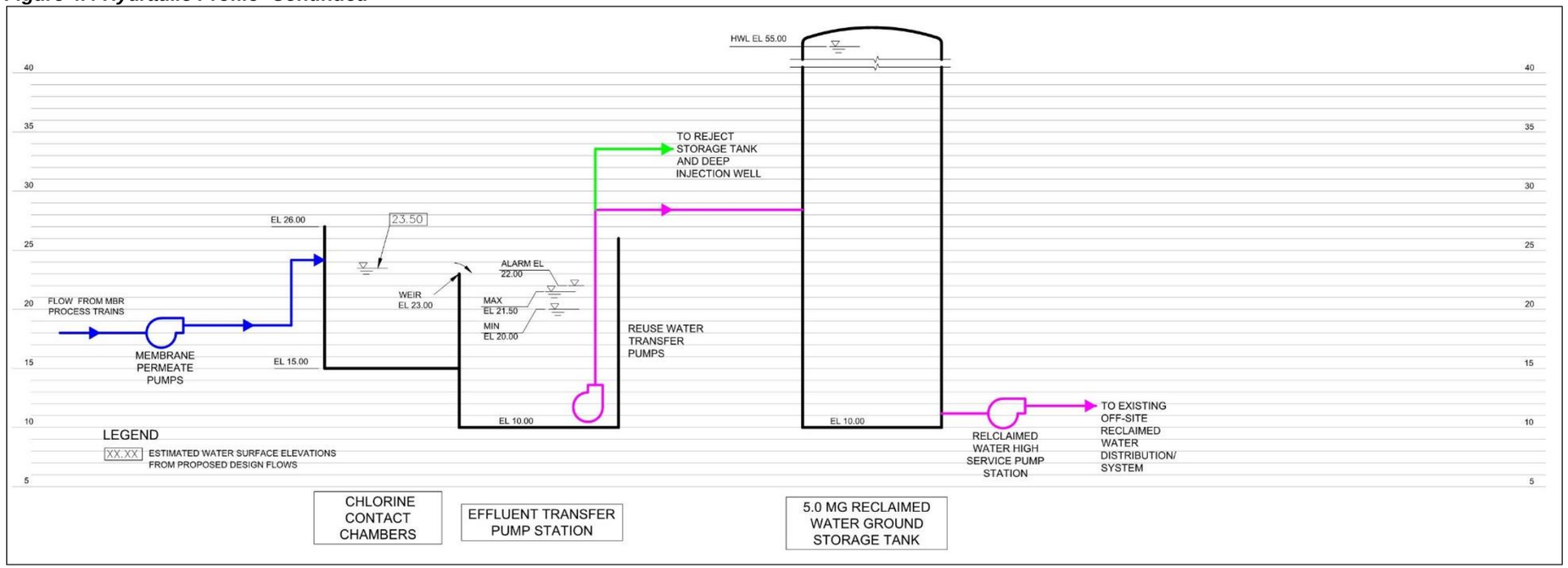

4.2. Preliminary Treatment: Headworks and Influent Pump Station

Raw wastewater from the collection system will be screened using a dual-stage system prior to entering the biological treatment process to remove items such as rags, fibers, and other debris. Influent screening protects the downstream treatment processes and equipment, assists in maximizing the associated treatment efficiency, and minimizes downstream operational and maintenance issues. Based on the location of the relocated WRF and the existing wastewater collection system, an influent master lift station will be required. The preliminary treatment system will incorporate the following design features:

4.2.1. Influent Master Lift Station

The influent master lift station will be designed utilizing wet-pit configuration with submersible, rail mounted, centrifugal, variable speed, chopper pumps. See ***Table 4.1*** for a summary of the influent master lift station preliminary design.

Table 4.1 Preliminary Design: Influent Master Lift Station

Type of Submersible Pump	Centrifugal, Variable Speed, Chopper	
Number of Pumps		5
Duty		4
Standby		1
Capacity - Each	gpm	2,700
Motor Size	hp	40
Firm Capacity	MGD	15.55
Total Capacity	MGD	19.44

4.2.2. Influent Flow Measurement

Influent flow measurement will include a magnetic flow meter. The flow meter will be installed on the influent master lift station discharge piping prior to the introduction of any recycle flows.

4.2.3. Influent Sampling

An automatic flow-proportioned composite sampler will be installed at the Headworks structure to monitor influent wastewater characteristics. The sampler will be programmed to automatically collect samples required for analyses specified in the operating permit, as well as those required for operational process control. In addition, a continuous pH monitoring device will be installed at this location to monitor the pH and conductivity of the influent flow. The location of the sampling and monitoring equipment will be prior to the introduction of any recycle flows that will be generated within the overall treatment process.

4.2.4. Headworks Structure

A new, cast-in-place concrete, elevated, dual-level headworks structure will be constructed at the relocated WRF. New facilities at the headworks including a dual stage screening system consisting of two mechanically cleaned in-channel initial drum or center-fed band screens and

two mechanically cleaned in-channel fine drum or center-fed band screens, associated screenings washing/compacting system, grit removal, grit dewatering system, integrated flow equalization control structure (weir), integrated flow splitting structure (weir gates), and odor control. Stainless steel slide gates will be provided to allow all channel mounted mechanical equipment to be isolated for maintenance and repair.

Each channel at the Headworks structure will include influent and effluent gates to isolate any channel for maintenance. The channels will be designed to provide a minimum approach velocity of 1 feet per second (fps) to maintain the solids in the influent in suspension and a maximum velocity of 5 fps to minimize materials being forced through the screen openings. Each channel will have a drain that will be equipped with a valve to allow for full dewatering of the channel for screen maintenance. Dual-stage screened and degritted raw wastewater will gravity flow to an integrated headworks structures influent flow splitting channel, through weir gates, to each anaerobic zone. The weir gates will also provide the ability to isolate process trains for maintenance.

4.2.5. First Stage (Initial) Screening

Initial screening will be used to remove debris present in the raw sewage, minimize the loading to the downstream fine screens, and prevent large debris from blinding the fine screens. The initial screening technology will consistent of two 6 mm or 5mm mechanically cleaned, in-channel drum or center-fed band screens. Each screen will be sized for the wet weather peak flows (i.e. fully redundant screens). The initial screen technology equipment selection and opening size will be determined during the design phase while conducting on-site wastewater characterization in coordination with specific membrane suppliers (see ***Section 4.7.2*** for membrane supplier selection). Each initial screen will convey screenings to an enhanced washing/compacting unit to separate organic and inorganic matter from the screenings. Washed/compacted screenings will be disposed at the landfill while the washed water with organics will be returned to the headworks structure for treatment through the on-site facility drain pump station. See ***Table 4.2*** for a summary of the Initial screening preliminary design.

Table 4.2 Preliminary Design: Dual Stage Screening - Initial (First Stage) Screening

Type - Alternative No. 1	In-Channel Drum	
Type - Alternative No. 2	Center-Fed Band Screen	
Size - Perforated Plate	mm	5 to 6
Screen Capacity, each	MGD	8.0
Screen Capacity, each	gpm	2,800
Screening Total Capacity - Firm	gpm	5,600
Screening Total Capacity - Firm	MGD	16.0
Number of Screens		3
Duty		2
Standby		1

4.2.6. Second Stage (Fine) Screening

As debris could damage membrane fibers, all membrane suppliers require fine screening to remove the debris and protect the downstream membranes. Based on recommendations from

MBR suppliers, the fine screening systems will have a maximum opening size of 1mm to 2 mm. The fine screens will be equipped with a perforated plate style screen to better screen stringy or fibrous material that could tangle around the membrane fibers, affecting the operation of the system and the life span of the membranes.

Two mechanically cleaned in-channel partially submerged rotating perforated drum screens or center-fed band screens with 1mm or 2mm opening size will be provided. Each screen will be sized for the dry weather peak flows (i.e. fully redundant screens) based on side-line flow equalization processes (See ***Section 4.3***). The fine screen technology equipment selection and opening size will be determined during the design phase while conducting on-site wastewater characterization in coordination with specific membrane suppliers (see ***Section 4.7.2*** for membrane supplier selection). Each fine screen will convey screenings to an enhanced washing/compacting unit to separate organic and inorganic matter from the screenings. Washed/compacted screenings will be disposed at the landfill while the washed water with organics will be returned to the headworks structure for treatment through the on-site facility drain pump station. See ***Table 4.3*** for a summary of the second stage preliminary design**.**

Table 4.3 Preliminary Design: Dual Stage Screening - Fine (Second Stage) Screening

Type - Alternative No. 1	In-Channel Drum	
Type - Alternative No. 2	Center-Fed Band Screen	
Size - Perforated Plate	mm	1 to 2
Screen Capacity, each	MGD	12.0
Screen Capacity, each	gpm	8,333
Number of Screens		3
Duty		2
Standby		1

4.2.7. Screenings Washing and Compacting

The initial and fine screenings will be conveyed by a transfer screw, washed, dewatered, and discharged to a dumpster located on the lower level of the Headworks structure. The screenings washing and compacting equipment will be located on the upper level of the Headworks structure. The organics, which are washed and squeezed out of the screenings, are returned to the influent through the on-site facility drain pump station where the organics are treated as part of the normal WRF process. A drain system located below the screening disposal receptacle (dumpster) is used to convey any excess wastewater in the screenings to the on-site facility drain pump station from where it is returned to the influent of the Headworks structure for retreatment.

4.2.8. Grit Removal Chamber

A grit removal process physically removes heavy, abrasive, inorganic solids from the flow stream. The removal of such grit, including sand, gravel, and other large particles, is important to protect the downstream process equipment from excessive wear, reduce the formation of deposits in

pipelines and process basins, and reduce solids handling. A properly designed and operated grit removal system should effectively remove grit of the size range that would be harmful to downstream processes, through either abrasion and wear of mechanical equipment, plugging of pipes, or settlement in the relatively quiescent zones of tanks/processes. All open-tank grit removal facilities will require covers for containment and odor control. A hydraulic-induced vortex-type tray grit removal chamber will be installed to remove sands, small rocks, seeds, and other similar material from the sewage. See ***Table 4.4*** for a summary of the grit removal system preliminary design.

Table 4.4 Preliminary Design: Grit Removal System

Type	Vortex flow and stacked tray	
Capacity, each	MGD	15.0
Capacity, each	gpm	10,417
Number of Systems		1
Duty		1
Standby		0
Removal of all grit (specific gravity 2.65)	%	95

4.2.9. Grit Pumps

Two new grit pumps (one duty and one standby) will be installed. The grit pumps will be designed to accommodate 0% to 10% solids concentrations and have a minimum firm slurry pumping rate of 300 gallons per minute (gpm). The grit pumps will be horizontally mounted, belt-driven, end-suction vortex induced flow centrifugal pumps.

4.2.10. Grit Classifying/Washing/Dewatering Unit

A hydraulic-induced centrifugal grit classifying/washing unit will be installed to capture, classify, and remove grits from the grit slurry flow. A grit dewatering unit will be installed to dewater cleaned grit exiting the grit classifying/washing units.

4.2.11. Odor Control

An odor control system will consist of biotrickling/bioscrubber filter system technology that primarily removes hydrogen sulfide (H_2S) and includes duct work to pick-up the covered and enclosed spaces of the Headworks structure and influent master lift station. The biotrickling/bioscrubber system size will be based on concentrations of H_2S collected at the existing WWTF, as well as data collected from other similar facilities.

To minimize the air space, flat covers will be installed over the influent screening channels and grit removal system. Since flat covers restrict the operators visual and olfactory references to effectively anticipate and react to changing wastewater conditions, sampling and access points will be provided. The flat covers will be constructed of either aluminum or FRP. In addition to the flat covers used, the screens will be enclosed to minimize odorous emissions at these locations. The lower level of the Headworks structure, where the screenings and grit dumpsters are to be located, will be totally enclosed and exhausted to the proposed odor control system. A negative air pressure will be maintained in the air space under the covers and within the enclosed lower level of the Headworks structure to contain and prevent the emission of nuisance odors. The

ventilation rate will comply with the National Fire Protection Association (NFPA) Standard 820–Standard for Fire Protection in Wastewater Treatment and Collection Facilities.

At a minimum the following will be provided:

- 6 air changes per hour (AC/hour) will be used for the non-worker access locations (e.g., influent channels, grit system, etc.)
- 12 AC/hour will be used for the worker access locations (e.g. lower level portion of the Headworks structure)

The ductwork upstream of the odor control system will be constructed of FRP. In addition, the fittings valves, dampers, gaskets, and other connectors used in the construction of the ductwork will be designed with corrosion protection. See ***Table 4.5*** for a summary of the Headworks Odor Control preliminary design.

Table 4.5 Preliminary Design: Headworks Odor Control

Type	Biotrickling/Bioscrubber Filter	
Number		2
Capacity Each	cfm	2,800
Capacity Total	cfm	5,600

4.3. Flow Equalization

Wastewater treatment performance can be improved when the variance between low flow periods and peak flows are reduced. During peak flow periods the hydraulic and biological loadings have the potential to elevate, producing less efficient treatment. Introducing flow equalization into the treatment scheme has the ability to stabilize the hydraulic and biological loadings by storing portions of the influent flow and introducing it back into the treatment process during low flow periods. Additionally, flow equalization is typically used prior to the MBR process to help reduce the stress of peak flows on the membranes.

4.3.1. Flow Equalization Type

There are two methods to typically operate equalization tanks, in-line and side-line:

- In-line flow equalization receives 100-percent of the flow after screening and grit removal system and then is pumped (flow controlled) to the biological process.

- Side-line flow equalization utilizes a flow control structure (weir) after screening and grit removal (or after first stage screening and grit removal) to send a predetermined flow (weir height setpoint), typically average day, directly to the biological treatment or second stage screening system. Flows in excess of the predetermined flow (average day) are diverted and stored in the equalization tank and then pumped (flow controlled) to the biological process or second stage screening system.

The selected flow equalization tank will be a side-line tank configuration with the flow control structure (weir) integrated into the headworks structure. The integrated flow control structure will be located downstream of the first stage (initial) screens and grit removal system to prevent larger debris and grit from accumulating within the flow equalization tank. The second stage (fine) screens will be operated in-line or from the flow equalization pumps. After second stage screening, the flow enters the biological process.

4.3.2. Flow Equalization Tank Sizing

The industry standard in determining the required volume of flow equalization beyond current conditions is 20 to 30 percent of the projected average daily flow. See ***Table 4.6*** for a summary of the flow equalization tank preliminary design.

Table 4.6 Preliminary Design: Flow Equalization Tank

Number		1
Length of Tank	ft	160
Width of Tank	ft	65
Operating Depth of Tank	ft	20
Total Operating Tank Volume (30% AADF)	gal	1,500,000

4.3.3. Flow Equalization Mixing

Aeration will be provided to maintain adequate mixing with 1.0 mg/L (minimum) of dissolved oxygen in the flow equalization tank to allow the operational flexibility to introduce return activated sludge (RAS) into the flow equalization tank. Air supply rates will be a minimum of 1.25 cfm per 1,000 gallons of storage capacity. See ***Table 4.7*** for a summary of the influent master lift station preliminary design.

Table 4.7 Preliminary Design: Flow Equalization Aeration Systems

Type of Blower	Positive Displacement	
Type of Diffusers	Coarse Bubble	
Number of Blowers		3
Duty		2
Standby		1
Capacity - each	scfm	1,250
Total Capacity - Firm	scfm	1,875
Total Capacity	scfm	3,750
Discharge Pressure	psig	9.0

4.3.4. Flow Equalization Return Pump Station

The water levels in the equalization tank will fluctuate based on the influent flows into the facility. This presents a varying head condition in the system. Equalization pumps can either pump directly into the treatment process or to the Headworks flow control structure. Flow metering devices will be positioned on the equalization return pump station to monitor flow and modulate pump speeds as required to control flow. See ***Table 4.8*** for a summary of the influent master lift station preliminary design.

Table 4.8 Preliminary Design: Flow Equalization Return Pump Station

Type of Pump	Centrifugal, Variable Speed	
Number of Pumps		3
Duty		2
Standby		1
Capacity - Each	gpm	2,700
Firm Capacity	MGD	7.49
Total Capacity	MGD	11.24

4.3.5. Flow Equalization Odor Control

Introducing RAS into the equalization tank will help reduce odors generated in the equalization tank. Therefore, an odor control system will not be implemented at this time, but space will be allocated for a future odor control system if air quality issues associated with the tank require odor control.

4.4. Primary Clarification

Primary clarification is not recommended since the influent wastewater is not expected to contain TSS greater than 500 mg/L, removing additional carbon increases the probability of requiring carbon addition for biological nitrogen removal, and the relocated WRF site is space limited.

4.5. Biological Treatment Process

The function of the biological treatment process is to remove soluble and particulate organic matter, suspended and non-settleable colloidal solids, nitrogen, and phosphorous from the wastewater to below acceptable effluent limits. The relocated WRF biological treatment process will be activated sludge, suspended growth, five-stage MBR Bardenpho process using biomass suspended in the wastewater to perform the required biological transformations. A recycle stream will be used to maintain the microorganism population within the treatment process. Appropriate solids retention times to achieve adequate biological treatment will be maintained. Nitrogen will be removed in the biological treatment process through the two-step process of nitrification and denitrification. Phosphorus will be removed in the biological treatment process through an initial anaerobic zone to promote the release and subsequent uptake of phosphorus by the microorganism population.

4.5.1. Biological Treatment Process – Five-Stage MBR Bardenpho

The five-stage Bardenpho process has been used successfully to meet total nitrogen limits of 3.0 mg/L and total phosphorus limits of 1.0 mg/L. The five-stage Bardenpho process will include two process trains with both consisting of an initial anaerobic reactor followed by a common feed-forward pumping/deoxygenation zone, then feed-forward pumping to the initial anoxic zones, aeration zones, post-anoxic (swing) zones and finally the MBR process trains. The biological treatment process will flow in series through a common wall basin structure with internal baffling designed to separate the anaerobic, anoxic, and aerobic zones to minimize potential short-circuiting and back-mixing between zones. The biological treatment system will be designed to provide operational flexibility with MLSS concentrations in the range of 4,000 to 8,000 mg/L. The large range of operational MLSS concentration provides the benefit of greater treatment capacity per unit treatment volume, increased reliability, and reduced membrane maintenance. The biological treatment process will incorporate the following process design features:

Anaerobic Zone

The first-stage anaerobic zone is used for biological phosphorus removal while the remaining anoxic and aeration zones are primarily for carbon and nitrogen removal.

Anoxic and Aeration Zone

Flow first enters the anoxic zone with nitrified, internally recycled mixed liquor from the aeration zone and RAS from the liquid-solids separation (membrane) process. Aeration is not provided in the anoxic zones. The combination of raw wastewater, RAS, and nitrified mixed liquor under anoxic conditions promotes denitrification, where microorganisms in the mixed liquor use nitrate (NO_3) as their oxygen source to metabolize the organic material in the raw wastewater, reducing nitrate, and releasing nitrogen gas to the atmosphere. In the aerobic zone, influent ammonia is converted to nitrite and then nitrate by nitrifying microorganisms. The anoxic zone and aeration zone are essentially configured as a conventional two-stage MLE process.

Post-Anoxic Zone

The post-anoxic zone is provided for additional denitrification to further reduce the effluent total nitrogen. The anoxic zones will be equipped with submersible mixers to keep the mixed liquor in suspension and well mixed . However, the post-anoxic zone will also be equipped with aeration diffusers to provide operational flexibility as a swing zone (i.e. operated with aeration or mixing only). A supplemental carbon feed (ex. methanol or glycerin) to the post-anoxic zone will provide sufficient food (carbon) to complete the denitrification reactions as required.

Membrane Bioreactor

The five-stage MBR Bardenpho process configuration does not require a dedicated reaeration zone since the membrane bioreactor zone can provide reaeration through membrane air scour. The membrane bioreactor process (5th stage in MBR Bardenpho process) provides the solids-liquid separation process with membrane filtration as the final step in the activated sludge, suspended growth biological treatment process.

To minimize the solids buildup near the membrane surface, which would reduce the flow of water through the membranes, an air scour system is used to scour the membrane surface. Permeate pumps pull water through the membrane by creating a partial vacuum. The biomass solids are too large (size exclusion) to pass though the membrane pores and remain in the mixed liquor. An air scour diffuser system will be located at the base of each membrane unit providing air scour to the membrane surface.

A RAS flow up 600% times maximum month flow (6Q) will be transferred by gravity back to the common feed-forward pumping tank using telescoping valves located in each MBR process train. Waste activated sludge will be periodically removed by gravity to control MLSS concentration in the MBR basin. The WAS will be transferred to the aerated sludge holding tanks for biosolids management.

See ***Appendix A*** for the preliminary biological treatment process design calculations and mass balance for one process train including three MBR process trains (n-1).

See ***Table 4.9*** for a summary of the biological treatment process tanks preliminary design.

Space intentional left blank

Table 4.9 Preliminary Design: Biological Treatment Process Tanks

No. of Anaerobic Process Trains		2
No. of Anoxic Process Trains		2
No. of Aeration Process Trains		2
No. of Post-Anoxic Process Trains		2
No. of Membrane Bioreactor Process Trains		7
Anaerobic Zone		
Length of Anoxic per Train	ft	25
Width of Anoxic per Train	ft	35
Depth of Anoxic per Train	ft	16
Total Volume of Anaerobic per Train	gal	104,720
Total Volume of Anaerobic	gal	209,440
Anoxic Zone		
Length of Anoxic per Train	ft	40
Width of Anoxic per Train	ft	35
Depth of Anoxic per Train	ft	18
Total Volume of Anoxic per Train	gal	188,496
Total Volume of Anoxic	gal	376,992
Aeration Zone		
Length of Aeration per Train	ft	90
Width of Aeration per Train	ft	35
Depth of Aeration per Train	ft	17.5
Total Aeration per Train	gal	412,335
Total Volume of Aeration	gal	824,670
Post Anoxic (Swing) Zone		
Length of Post-Anoxic per Train	ft	40
Width of Post-Anoxic per Train	ft	35
Depth of Post-Anoxic per Train	ft	17
Total Post-Anoxic per Train	gal	178,024
Total Volume of Post Anoxic	gal	356,048
Membrane Bioreactor		
Length of MBR per Train	ft	55
Width of MBR per Train	ft	10
Depth of MBR per Train	ft	16
Total MBR per Train	gal	65,824
Total Volume of MBR	gal	460,768
Total Treatment Volume	gal	2,227,918

4.5.2. Process and Hydraulic Flow

Dual-stage screened and degritted raw wastewater will gravity flow from the headworks structure influent flow splitting channel to each anaerobic zone and then over a weir into the feed-forward pumping tank/deoxygenation tank. The feed-forward pumping tank will be provided with submersible, rail mounted pumps to transfer mixed liquor to the anoxic zone (3Q to 5Q) and the anaerobic zone (1Q). The feed-forward pumping tank will also effectively serve as a deoxygenation zone to improve BNR operations by receiving RAS flow with potentially high DO from MBR process trains (air scour) prior to pumping to the anoxic zone and anerobic zone. After feed-forward pumping, the biological treatment process flows by gravity in series through anoxic, aerobic, and post-anoxic zones to a common MBR process train flow splitting channel to evenly split the flow to the MBR process trains. See ***Figure 4.3*** and ***Figure 4.4*** for the preliminary hydraulic profile.

4.5.3. Process Configurations

The feed-forward system provides operational flexibility will multiple recycle stream configurations to optimize BNR while reducing the need for additional recycle pumps. The system provides the capability for gravity RAS return, gravity denitrified anoxic MLR return, and gravity nitrified aerobic MLR return using telescoping valves located in each MBR process train, anoxic zone, and aerobic zone respectively. Ultimately, the feed forward system enables the relocated WRF to meet the operational design criteria for BNR and AWT discussed in ***Section 3.2.1***. The following summarizes the proposed process flow configurations:

- Pumped feed-forward mixed liquor from the common feed-forward pumping tank (deoxygenation zone) to anoxic zones (3Q to 5Q) for biological treatment;

- Pumped feed-forward mixed liquor from the common feed-forward pumping tank (deoxygenation zone) to anaerobic zones (1Q) for biological phosphorous removal as required;

- Gravity flow RAS from individual MBR process trains using telescoping valves to the common feed-forward pumping tank (deoxygenation zone) for biological treatment;

- Gravity flow nitrified MLR from the aerobic zones using telescoping valves to the common feed-forward pumping tank (deoxygenation zone) for biological nitrogen removal;

- Gravity flow denitrified MLR from the post-anoxic zones using telescoping valves to the anaerobic zone for biological phosphorous removal;

See ***Table 4.10*** for a summary of the feed forward pumping system preliminary design.

Table 4.10 Preliminary Design: Feed Forward Pump Station

Type of Submersible Pump	Centrifugal, Variable Speed	
Number of Pumps		4
Duty		3
Standby		1
Capacity - Each	gpm	10,000
Firm Capacity (600% Return at MMAD)	MGD	40.50
Total Capacity	MGD	54.00

4.5.4. Tapered Diffused Aeration System

Three distinct aerobic zones equipped with fine bubble membrane diffusers in the aeration zones will provide process air for the biological treatment. The diffuser density will be the highest in the first aerobic zone and decrease in subsequent zones to achieve a tapered aeration effect. Distinct tapered aeration zones increases process control and improves energy efficiency by providing more air (more diffusers) in the first zone, less in the second zone, and the least in the third zone. See ***Table 4.11*** for a summary of the biological treatment aeration preliminary design.

Table 4.11 Preliminary Design: Biological Treatment Aeration Systems

Type of Blower – Alternative No. 1	Multi-Stage Centrifugal	
Type of Blower – Alternative No. 2	High-Speed Turbo	
Type of Diffusers	Fine Bubble Membrane	
Number of Blowers		4
Duty		3
Standby		1
Capacity - each	scfm	2,000
Total Capacity - Firm	scfm	6,000
Total Capacity	scfm	8,000
Discharge Pressure	psig	8.5

4.6. Secondary Clarification

The primary purpose of the secondary clarification process is to separate the treated water from the activated sludge following the biological process. Secondary clarification is not required when MBR technology is utilized.

4.7. Membrane Filtration

The purpose of tertiary (post-secondary) filtration is to remove suspended solids from the biological treatment process and provide a high-quality filtrate to optimize the efficiency of the disinfection process. Tertiary filtration is an essential component in producing public access reclaimed water with high-level disinfection. The relocated WRF tertiary filtration process will incorporate the following design features:

4.7.1. Membrane Filtration

The relocated WRF design will utilize microfiltration (MF) or ultrafiltration (UF) membrane elements with pore sizes ranging from 0.04 to 0.4 micrometers (µm) in a low-pressure application. Solids removal is achieved through size exclusion in which particles larger than the membrane pore size are retained on the membrane surface and filtered water passes through the membrane (filtrate). The membrane elements will be air scoured on a frequent cycle to physically remove solids accumulated on the membrane surface. Periodic chemical cleaning is required to remove scaling and prevent long-term fouling. MF/UF processes are capable of reliably producing a high-quality effluent with turbidity less than 0.1 NTU.

4.7.2. Membrane Filtration System Supplier

There are a number of membrane filtration suppliers with each offering proprietary MBR process configurations for specific membrane elements, membrane permeate pump systems, membrane air scour systems, control systems, and ancillary cleaning systems. Based on the City's procurement process, the final design documents will include multiple bid alternatives with up to three different proprietary MBR process configurations. The cast-in-place concrete MBR process train structure will be sized for the largest footprint MBR. The MBR process configuration, membrane filtration system supplier, and membrane type will be based on only two technologies: hollow-fiber or flat-sheet/flat-plate.

Hollow-Fiber Membrane Elements

Hollow-fiber membrane elements are formed by sealing the hollow fibers to one or two headers (at opposite sides). The individual hollow fibers are potted as one dense bundle, several sub-bundles, or are spaced out individually at the location of the header. The hollow-fiber membrane elements are submerged in the membrane bioreactor with the MLSS located outside of the fiber. The design phase will include, but not be limited to, the proprietary MBR processes supplied by Suez ZeeWeed and Evoqua MEMCOR.

Flat-Sheet and Flat-Plate Membrane Elements

Flat-sheet and flat-plate membrane elements have two membrane sheets connected by an internal support structure that serves as the permeate extraction channel. The structure is typically called a membrane panel and are installed vertically in a membrane cassette, with a specific spacing in between each membrane sheet between 6 and 10 mm. The flat-sheet and flat-plate membrane elements are submerged in the membrane bioreactor with

the MLSS located outside of the panels. The design phase will include, but not be limited to, the proprietary MBR processes supplied by Kubota Membrane USA and Microdyn Bio-Cel.

4.7.3. Membrane Filtration Flux

Membrane filtration is achieved in a compact footprint due to the associated high loading rates. The key design parameter for membrane filtration is the flux through the membrane elements where flux describes the rate of water filtered through the membrane element measured in gallons per day per square foot of membrane area (gfd). The design flux includes the MBR system operating with all trains in service and with one train out-of-service (n-1). The design flux selected for AADF is 10 gfd and MDF is 17 gfd. See ***Table 4.12*** for a summary of the membrane filtration design flux criteria for preliminary design.

Space intentional left blank

Table 4.12 Preliminary Design: Membrane Filtration System

Manufacturer	Supplier No. 1		Supplier No. 2		Supplier No. 3	
Membrane Size	Ultrafiltration (0.04 micron)		Microfiltration (0.4 micron)		Ultrafiltration (0.04 micron)	
Type	Flat Sheet		Flat Plate		Hollow Fiber	
Membrane Surface Area per Unit	sf	5,166	sf	6,456	sf	13,885
Number of Membrane Trains		7		7		7
Number of Units per Train		18		14		7
Total Number of Units		126		98		52
Total Membrane Surface Area	sf	650,916	sf	632,688	sf	631,768
Total Membrane Surface Area with One Train Out of Service	sf	557,928	sf	542,304	sf	541,515
Design Flux - AADF	gfd	10	gfd	10	gfd	10
Design Flux - MDF	gfd	17	gfd	17	gfd	17
Design Flux - MDWWF (Class I)	gfd	20	gfd	20	gfd	20
Design Flux - MWF (Class I)	gfd	17	gfd	17	gfd	17
Available Capacity at Design Flux at AADF	FS	30%	FS	27%	FS	26%
Available Capacity at Design Flux at MDF	FS	33%	FS	29%	FS	29%
Available Capacity at Design Flux at MDWWF - Class I	FS	6%	FS	3%	FS	3%
Available Capacity at Design Flux at MWF - Class I	FS	5%	FS	2%	FS	2%
Flux - AADF	gfd	7.7	gfd	7.9	gfd	7.9
Flux - 3MADF	gfd	9.8	gfd	10.0	gfd	10.1
Flux - MMADF	gfd	10.4	gfd	10.7	gfd	10.7
Flux - MDF	gfd	12.8	gfd	13.2	gfd	13.2
Flux - MDWWF	gfd	16.1	gfd	16.6	gfd	16.6
Flux - MWF	gfd	13.8	gfd	14.2	gfd	14.2
Flux - M24HF	gfd	4.5	gfd	4.7	gfd	4.7
Flux - PHF	gfd	23.0	gfd	23.7	gfd	23.7
Flux (Class I) - AADF	gfd	9.0	gfd	9.2	gfd	9.2
Flux (Class I) - 3MADF	gfd	11.4	gfd	11.7	gfd	11.7
Flux (Class I) - MMADF	gfd	12.1	gfd	12.4	gfd	12.5
Flux (Class I) - MDF	gfd	15.0	gfd	15.4	gfd	15.4
Flux (Class I) - MDWWF	gfd	18.8	gfd	19.4	gfd	19.4
Flux (Class I) - MWF	gfd	16.1	gfd	16.6	gfd	16.6
Flow at Design Flux	MGD	11.1	MGD	10.8	MGD	10.7
Flow at Design Flux (Class I)	MGD	9.5	MGD	9.2	MGD	9.2
Flux (Class I) - M24HF	gfd	5.3	gfd	5.4	gfd	5.4
Flux (Class I) - PHF	Not Applicable with Flow Equalization					

4.7.4. Membrane Cleaning System

The primary method used to mitigate membrane fouling is air scour cleaning and membrane relax cycling. The membrane relax process involves the suspension of permeate while allowing the air scour to continue operating during an operator defined time interval. Following the end of this defined time interval, membrane filtration will automatically resume operation. The time interval between relax cycles and length of relax can be adjusted by the operator. The membrane relax cycle minimizes material accumulation that could foul membrane pores. Ultrafiltration type membranes also use “backpulsing”, where flow is reversed from inside to out, typically every 15 minutes.

However, the membrane units will also require periodic maintenance cleaning after organic and inorganic materials build up on the membrane surface. The maintenance cleaning process is typically carried out in-situ without the need to drain the mixed liquor. The maintenance clean is typically every four to six months and is generally a scheduled event. Each cleaning takes approximately two (2) hours. Ultrafiltration type membranes may also require recovery cleaning, where the MLSS is fully drained from the MBR basin and the membranes are allowed to soak in a chemical solution for 24-48 hours.

To clean the membranes, one MBR train will be taken offline at a time by stopping the flow of mixed liquor to the basin. In addition, all aeration and permeating will stop to that basin. The chemicals required are sodium hypochlorite and oxalic or citric acid for organic and inorganic materials, respectively. The cleaning chemicals will be delivered in totes and transferred directly to the membrane elements. The diluted cleaning chemicals are transferred to the inside of the membrane elements, displacing the permeate from inside the membrane cartridges. After cleaning, the diluted chemicals remain in the mixed liquor and are processed with the wastewater thereby avoiding the need for disposal of spent cleaning solution. Proper cleaning and maintenance of the membrane units will improve their longevity and help maintain an effluent that meets reclaim water standards.

4.7.5. Membrane Element Redundancy

The relocated WRF design includes fully redundant membrane element trains. Operating with one of the membrane element trains out-of-service, known as the “n-1” condition, is typically the result of backpulsing (hollow-fiber), maintenance cleaning, recovery cleaning, or required maintenance/repair. The membrane filtration system design includes the ability to reliably maintain permeate production at the design flow and design flux for the “n-1” condition. The “n-1” condition is also used to achieve Class I reliability standards. See ***Section 6.3*** for further details.

4.8. Disinfection Treatment Process

Disinfection is the inactivation, or killing, of pathogens in water. This process is a necessary barrier to prevent the transmission of waterborne diseases by microorganisms. All wastewater treatment systems must provide disinfection. In general, the disinfection requirement for wastewater is to achieve pathogen inactivation and fecal coliform reduction, and to maintain disinfection residual for reclaimed water distribution systems using chlorine or other disinfectants that can provide measurable residuals. Maintaining a residual chlorine concentration is necessary to prevent bacterial growth in the reclaimed water distribution system.

4.8.1. Gaseous Chlorine

The disinfection treatment process for the relocated WRF will be similar to what is currently used at the City's existing WTP and WWTF, which is gaseous chlorine that is delivered to the site for disinfection in 1-ton containers. Gaseous chlorine has a long history of successful operation for disinfection in City's existing WTP and WWTF. It is readily available in conventional 1-ton containers and provides an economical option for disinfection.

4.8.2. Disinfection Design Criteria

Disinfection requirements outlined by 62-610, Part III, FAC will be satisfied using gaseous chlorine addition followed by detention in a chlorine contact chamber. To achieve high-level disinfection, the effluent will be membrane filtered to reduce TSS to less than 5 mg/L, then gaseous chlorine will be added to meet the minimum Concentration Time (CT) value. Rule 62-600.440, FAC indicates that for high level disinfection, a minimum CT value of 25 milligrams per liter per minute (mg/L-min) must be obtained at peak hourly flow if the fecal coliform count in the effluent is less than 1,000 per 100 mL while higher CT values between 40 mg/L-min and 120 mg/L-min are required for fecal counts in excess of this amount. Utilizing membrane filtration, the fecal count is expected to be much less than 100 per 100 mL and a design CT value of 25 mg/L-min is used for the design. However, the chlorine feed system will be designed with the ability to provide up to a CT of 40 mg/l-min during MMDF flows if required.

Rule 62-600.440, FAC also requires that chlorine residual of 1.0 mg/L or greater be obtained after 15 minutes of contact time at peak hourly flow. Chlorine residual will be monitored continuously at the relocated WRF using an online chlorine residual analyzer to divert reclaimed water that does not meet the minimum chlorine residual standards (chlorine residual >1.0 mg/L). In the event that the reclaimed water does not meet these criteria, it will be considered reject water and will be diverted to the existing onsite reject tank and existing deep injection well for disposal. See ***Section 6.1.4*** for additional details.

4.8.3. Chlorine Contact Structure

The chlorine contact chambers will be designed so each basin can be operated independently. Each will be designed to provide plug flow conditions and constructed to provide a serpentine pattern, to minimize short-circuiting and ensure that the minimum contact time is achieved. To

improve the hydraulic performance of the chlorine contact chambers, the addition of submerged baffles, deflection guide vanes, or the combination of the two will be considered during the design phase. Additionally, each basin will be equipped with a drain for cleaning purposes.

See ***Table 4.11*** for a summary of the chlorine contact structure preliminary design.

Table 4.13 Preliminary Design: Chlorine Contact Chambers

Type		3-Pass
No. of CCC		3
No. of CCC with Largest Unit out of Service		2
Volume of Each	gal	43,490
Volume Total	gal	130,469
Detention Time at MDDWF[1]	min	22.5
Detention Time at MDDWF w/ Largest Unit out of Service	min	15.0
Length of CCC Pass	ft	40
Width of CCC Pass	ft	6
Depth of CCC	ft	8

[1] MDWWF: Maximum Day – Dry Weather Flow. During peak flow events, the deep injection well can be utilized without disinfection. Therefore, the design flow only considers the maximum daily dry weather flow.

4.9. Biosolids Management

The solids removed from the wastewater include screenings, grit, scum, and solids generated during the treatment process. The screenings and grit that are removed from the wastewater at the headworks are dewatered and disposed into a waste receptacle (dumpster) located at the lower level of the headworks structure. The screenings and grit will be hauled to a landfill for disposal. The remaining sources of solids from the relocated WRF are WAS and scum. The scum consists of floatable materials that are removed from the surface of the common MBR process train flow splitting structure and flow equalization tank. This section identifies biosolids management strategies and describes biosolids thickening, biosolids dewatering, and biosolids stabilization treatment technologies.

4.9.1. Aerated Sludge Holding Tank and Thickening

An aerated sludge holding tank will be designed at the relocated WRF and partitioned into two tanks to provide redundancy. Coarse bubble aeration will be used to completely mix and aerate the sludge. Clarified liquid from aerobic sludge holding tanks will be decanted as supernatant to allow for solids thickening and increase solids storage time. Supernatant removal is provided by telescopic valves or floating decanting weirs. See ***Table 4.14*** for a summary of the biological treatment aeration holding tank preliminary design. See ***Table 4.15*** for a summary of the biological treatment aeration preliminary design.

Table 4.14 Preliminary Design: Aerated Sludge Holding Tank

Number		2
Length of Sludge Holding Tank	ft	100
Width of Sludge Holding Tank	ft	40
Depth of Sludge Holding Tank	ft	16
Total Basin Volume - Each	gal	463,760
Total Basin Volume	gal	927,520
Design SRT at MMAD - Each	days	5.0
Design SRT at MMAD - Total	days	10.0

Table 4.15 Preliminary Design: Aerated Sludge Holding Tank Aeration Systems

Type		Positive Displacement
Number of Blowers		3
Duty		2
Standby		1
Capacity - each	scfm	1,500
Total Capacity - Firm	scfm	3,000
Total Capacity	scfm	4,500
Discharge Pressure	psig	9.0

4.9.2. Biosolids Treatment – Chemical Stabilization

Chemical stabilization is the process of applying chemicals to biosolids. The City's existing WWTF utilizes chlorine dioxide addition to oxidize the biosolids and achieve Class B stabilization. The City's existing chemical stabilization system (BCR Clean B™) will be relocated to the new WRF site for Class B stabilization. The relocated chemical stabilization system will be located in a new chemical stabilization structure.

4.9.3. Biosolids Dewatering – Centrifuge

Solids dewatering is commonly used in wastewater treatment facilities to concentrate combined or separate solid streams. Dewatering is beneficial for the purpose of reducing the volume of solid streams, saving money on storage and transportation. The City's existing WWTF utilizes a centrifuge for dewatering post chemical stabilization. The centrifuge separation of the solids-liquids occurs as a result of the centrifugal forces and the difference in density between the solids and liquids. Because centrifugal force is applied, a high capacity can be achieved, and footprint requirements are minimized. The City's existing centrifuge will be relocated to the new WRF site for biosolids dewatering. The relocated centrifuge will be located in a new biosolids dewatering structure.

4.9.4. Odor Control

An odor control system will consist of covers over the open areas of the aerated sludge holding and a bio-trickling filter odor control system similar to the headworks odor control system. A negative air pressure will be maintained in the air space under the covers and within the enclosed area of the aerated sludge holding tank to contain and prevent the emission of nuisance odors. At a minimum, 6 air changes per hour (AC/hour) will be used for the aerated sludge holding tank.

4.10. Effluent Storage, Pumping, and Disposal

The effluent from the chlorine contact chambers will flow over weirs with ultrasonic transducers measuring the flow and discharge to the common wall effluent transfer pump station. Effluent transfer pump station will convey reclaimed water a new 5.0 MG reclaimed water ground storage tank or to the existing 3.0 MG reject ground storage tank for substandard effluent disposal. The effluent transfer pump station will be vertical turbine type pumps with variable frequency drives. See ***Table 4.15*** for a summary of the effluent transfer pump station preliminary design.

Table 4.16 Preliminary Design: Effluent Transfer Pump Station

Type of Pump	Vertical Turbine, Variable Speed	
Number of Pumps		4
Duty		3
Standby		1
Capacity - Each	gpm	2,900
Firm Capacity	MGD	12.49
Total Capacity	MGD	16.65

A reclaimed water pumping station will be provided to convey reclaimed water from the ground storage tank to the existing reclaimed water distribution system. The reclaimed water high service pump station will be vertical turbine can pumps with variable frequency drives. See ***Table 4.16*** for a summary of the reclaimed pump station preliminary design.

Table 4.17 Preliminary Design: Reclaimed Water High Service Pump Station

Type of Pump	Vertical Turbine, Variable Speed	
Number of Pumps		4
Duty		3
Standby		1
Capacity - Each	gpm	2,900
Firm Capacity	MGD	12.49
Total Capacity	MGD	16.65

4.11. Existing Components to Retain and Relocate

There are several existing components at the existing WWTF that will be retained and relocated. ***Table 4.17*** summarizes the processes that will be retained. Of the five forms of treatment, only the existing public access reclaimed water components, biosolids stabilization and dewatering components have useful life remaining and meet the new relocated WRF design criteria.

Table 4.18 Existing Components to Retain and Relocate

Form of Treatment	Retain and Relocate	Comment
Preliminary Treatment	No	Existing condition requires replacement within 5-10 years. Minimal value in relocation.
Secondary Treatment	No	Existing condition requires replacement within 5-10 years. Minimal value in relocation.
Tertiary Treatment	No	Existing condition requires replacement within 5-10 years. Minimal value in relocation.
Effluent Management	Yes	Existing 3.0 MG reject storage tank and deep well injection is very near proposed relocated WRF site. Connect to existing public access reuse water system Utilize existing deep well injection for substandard effluent
Biosolids Management	Yes	Relocate existing chemical stabilization process and existing centrifuge dewatering system.

5. ENVIRONMENTAL EFFECTS

The purpose of this section is to examine the potential environmental effects associated with the relocated WRF site, proposed design, overall construction, and proposed operation of the treatment facilities.

5.1. Stormwater Management and Site Drainage

All stormwater generated from the relocated WRF site will be treated and attenuated in accordance with Florida Statute Chapter 373, Water Resources. The proposed site is located in FEMA Flood Zone X. This indicates the area has a minimal potential for flood hazard and is determined to be outside of the 500-year flood level and protected by levee from the 100-year flood level. The proposed stormwater management system will consist of a series of vegetated swales and retention ponds. In accordance with Chapter 62-600.400(2)(c) FAC, the treatment facilities and structures including electrical and mechanical equipment are protected from physical damage by the 100-year flood event 25-year flood event since the relocated WRF site's finished grade well exceeds these flood levels. Additionally, mechanical equipment and electrical equipment will be further elevated on pads or mounted on walls.

5.2. Air Quality Management

Near the gaseous chlorination facility but not inside any room where gaseous chlorine is stored or handled, a self-contained breathing apparatus (SCBA) meeting the requirements of the National Institute for Occupational Safety and Health equipment will be provided. Additionally, continuous chlorine leak detection equipment that is connected to an alarm system will be provided. The alarm system shall include an audio-visual alarm at the relocated WRF with an automatic telephone dialing or notification service. An emergency chlorine leak repair kit meeting the requirements of the Chlorine Institute will also be provided.

5.3. Odor Control

The potential release of odors is a major concern for any WRF operations. The relocated WRF will incorporate measures to reduce offensive odors, especially H_2S, which can be detected at very low concentrations. The treatment technologies used for odor control will include a combination of treatment unit containment covers and biological scrubbers. In addition, consideration will be given during the design phase to ensure that odor control can be added relatively easily added in the future for other treatment units such as flow equalization.

5.4. Noise Control

The sound level from any of the facilities within the relocated WRF site will not exceed 70 decibels on A-rated scale (dBA). The noise associated with the relocated WRF will be similar to a normal conversation within a 3-foot distance. The process equipment buildings will be designed with sound attenuation with panels potentially installed on the walls or ceilings where necessary to

meet the noise levels. In addition, manufactured noise suppression enclosures for equipment will be installed, where necessary. Throughout the design process, the areas in which noise attenuation is required will be evaluated. The odor control system, aeration blowers, backup power generator, and miscellaneous pumps and motors are expected to receive some type of noise attenuation.

5.5. Public Accessibility

The overall site security system for the relocated WRF site will include an electronic opening gate that requires the use of a keycard or calling the facility from a keypad to gain access to the site. The gate will remain locked in order to limit public access to the site.

5.6. Proximity to Existing and Proposed Residential Areas

The relocated WRF will be located in the vicinity of the existing City's Airport and WTP. Any development for the surrounding area/parcels will be buffered by a considerable distance. In addition, the relocated WRF buffering includes the required horizontal and vertical separation from the existing Airport infrastructure including runways.

5.7. Lighting

Without disturbing adjacent land uses, on-site lighting throughout the relocated WRF site will be provided for safety and operations visibility. Pole mounted LED lights will be provided on all process structures. Precautions will be taken so that glare from the lights will not impact adjacent properties including the City's Airport. Exterior LED lighting will also be provided at buildings, along roadways, and walkways to improve safety to these structures. Specific lighting levels indoors and outdoors shall be established per the latest version of the Lighting Handbook (Illuminating Engineering Society).

5.8. Aerosol Drift

Land uses immediately adjacent to the relocated WRF will be buffered by distance. The design will minimize the formation and potential of any aerosols drifting from the fine bubble aeration system, coarse bubble aeration systems, and submerged mechanical mixers.

6. OPERATION AND CONTROL STRATEGY

This section summarizes the operation and control strategies for the prevention of upsets including alternate disposal methods and Class I reliability classification/features. Overall, the relocated WRF will be designed to:

- Avoid process upsets;
- Provide multiple effluent disposal alternatives (public access reclaimed water and DIW);
- Meet Class I reliability standards and;
- Provide operational flexibility and treatment capacity (AWT) to meet future regulatory requirements.

6.1. Prevention of Process Failures

The 5-stage MBR Bardenpho process has historically documented data that indicate this process can accommodate large variations in flows and solids loadings. The proposed basins have been sized with adequate hydraulic retention time to allow for peak flows and loadings. Operational flexibility has been incorporated into the aeration system, internal recycle pumping systems, RAS pumping systems, and WAS pumping to accommodate variable solid loading conditions. Additionally, the flexibility of the MBR Bardenpho process can be used to provide a higher microorganism population (i.e. MLVSS concentration) by increasing the solids in the basins. The increased microorganism population provides additional treatment capacity and resistance to toxic loadings increasing the treatment process integrity. The membrane element design flux is selected to accommodate peak flow and solid loading rates for reliability removal of solids from the MBR Bardenpho process. Therefore, the use of 5-stage MBR Bardenpho process, in conjunction with sufficient unit volumes and operational flexibility, makes process failures unlikely.

6.1.1. Operational Flexibility

The design of treatment process will provide the Staff with sufficient operational and control flexibility to adapt to any situation that may arise within the basis of design criteria established in ***Section 3.0***. Additionally, the relocated WRF will be designed to accommodate anticipated future regulatory requirements while maintaining a high-quality effluent. Operational flexibility within the unit processes will help prevent process failures due to increased organics, solids, or nutrient loading by allowing the actual process to be changed such as:

- In-line and side-line flow equalization
- RAS flow into the flow equalization tank
- Adjustable RAS configurations
- Adjustable anoxic and aerobic MLR return configurations
- Adjustable speed RAS pumping systems
- Adjustable aeration system with DO controllers
- Adjustable aeration system with Ammonia and DO controllers (ABAC)

- Post-anoxic zone designed as a swing zone with both aeration (swing) or mixing (post-anoxic)
- Adjustable metal salt addition for chemical TP removal (AWT)
- Adjustable supplemental carbon feed for AWT
- Deep well injection for substandard or excess effluent
- Substandard (reject) ground storage tank
- Disinfection system sized for CT value of 40

6.1.2. Staff Training

During construction of the new facilities, the City's Staff will be trained in the O&M of the unit processes and equipment installed at the relocated WRF including process upset prevention, operational procedures in case of a process failure, and press control.

6.1.3. Process Control, Monitoring, and Instrumentation

To provide automated process control and operational reporting, the design will include Programmable Logic Controllers (PLCs), continuous online probes, analyzers, monitoring devices, and a system-wide SCADA system.

The automated control system will use PLCs strategically located throughout the relocated WRF. Operator interface with the control system will be provided through desktop work stations at the operations building. A control system interconnection between the relocated WRF and existing WTP control systems will be implemented using similar components to those in the existing WTP control system. The SCADA software will be used for monitoring real time and historical information to improve operations, maintenance, and treatment efficiency. A process laboratory will be included as part of the operations building that will include the necessary equipment to perform process analyses and tests. The process control and monitoring strategies with the associated instrumentation includes the following:

Preliminary Treatment and Flow Equalization

The headworks processes including the influent pump station, screening systems, and grit removal will be controlled by local control panels typically supplied by the equipment manufacturer. A local PLC will monitor operations, issue alarms, and provide variable speed control for the flow equalization pumps.

Biological Treatment and Membrane Bioreactor

The processes associated with the biological treatment and MBR process including aeration control, air scour control, and permeate pumping will be automated. A local PLCs will monitor operations, issues alarms, provide variable speed control for RAS pumping operations, and provide variable speed control for aeration systems. As required for BNR, metal salt and supplemental carbon feeds will be automated using flow proportional feeds.

Ammonia Monitoring for Ammonia-based Aeration Control

Ammonia-based aeration control (ABAC) is an aeration control strategy with the ability to reduce operating cost (e.g. reduce supplemental carbon requirement, reduce energy for aeration) and monitor nitrification. The ABAC control strategy utilizes a cascade feedback

loop where an ammonia controller provides the set-point for the DO controller. The DO controller than provides a set-point for controlling the air flow from the aeration blowers. Ammonia probes for online measurement will be installed at the end of primary aeration basin to provide ABAC capabilities.

DO Monitoring for DO-based Aeration Control

Multiple online DO measurement probes will be installed in the primary aerations basins to control the DO in the three tapered aeration zones and support the ABAC system by controlling the air flow from the aeration blowers. A DO-only aeration control strategy will also be available for City Staff to implement.

Nitrate Monitoring

Online measurement nitrate probes will be installed at the end of secondary anoxic zone to provide process efficiency and control data.

Turbidity monitoring

Prior to the addition of chlorine, the turbidity of the membrane filtered permeate will be monitored using an on-line turbidity analyzer.

Chlorine Residual Monitoring

A chlorine residual analyzer will take samples at a predetermined interval and measure the chlorine residual in the effluent. The chlorine feed system will be automated by using a flow proportional gaseous chlorine feed with the effluent chlorine residual analyzer used as trim. To control the dosage of gaseous chlorine added for disinfection, a cascade control loop system that incorporates the flow and chlorine residual measurement will be used. In this operation, the flow measurement (flow proportional) and chlorine measurement (residual trim) from the residual chlorine analyzer will be sent to a PLC to control the chlorine dosage rates fed to the chlorine contact chambers.

Effluent Pumping and Disposal

The reclaimed water transfer Pumps will be automatically controlled based on the effluent wet well level. The reclaimed water high service pumping station will be automatically controlled to maintain reclaimed water discharge pressure at an operator adjustable value.

pH Monitoring

pH probes will be used to monitor the influent and effluent conditions. The on-line pH probes will be installed at the influent to the relocated WRF at the Headworks Structure and in the effluent transfer pump station to measure the pH of the effluent.

6.1.4. Operating Protocol for Reclaimed Water Production

Rule 62-610.463(2) requires that the relocated WRF incorporate into the process continuous on-line monitoring for turbidity before application of the gaseous chlorine and continuous on-line

monitoring of total chlorine residual prior to the discharge into the reclaimed water ground storage tank. The continuous online monitoring equipment proposed at the WRF for turbidity and chlorine residual will be equipped with an automated data recording/logging device through the SCADA system.

Effluent TSS Control

Reclaimed water is required to contain less than 5 mg/L of TSS. The TSS will be monitored using turbidity as a surrogate to maintain the TSS below 5 mg/L in the reclaimed water. After membrane filtration, the turbidity will be continually monitored using an in-line turbidity meter that is located on the permeate discharge lines. A turbidity setpoint of 1.0 NTUs will be initially established as the setpoint to detect an excursion of TSS in the reclaimed water from the relocated WRF. When the turbidity exceeds the setpoint continuously for 5-minutes, an alarm is sounded, and a red light will be illuminated. In addition, the system will be automated such that appropriate motorized control valves will open and close. This valve changing sequence will deliver the substandard (reject) water to the reject storage tank for deep well injection effluent disposal.

Chlorine Residual Control

Reclaimed water is required to contain a minimum of 1 mg/L of total residual chlorine and maintain a CT of 25 mg/L-min during PHF conditions. A total residual chlorine concentration setpoint of 1.2 mg/L will be initially established to detect substandard reclaimed water quality. Similar to the turbidity monitoring system, when the total residual chlorine concentration falls below the setpoint continuously for 5-minutes, an alarm will be sounded, and a red light will be illuminated at the reclaimed water control panel. The system is automated such that appropriate motorized control valves will open and close. This valve changing sequence will deliver the substandard (reject) water to the reject storage tank for deep well injection effluent disposal.

Substandard Effluent Control

In both cases, a minimum time of 5-minutes will be provided from the time of the turbidity or total residual chlorine concentration set points are exceeded to when the automated valves open and close. This will allow operating conditions to stabilize in the event the exceedance was an aberration or was the result of an inconsistent in-line meter reading due to interference. To ensure their accuracy, these instruments will be calibrated according to the requirements of Chapters 62-160 and 62-601, FAC and maintained according to the manufacturer's O&M instructions.

6.2. Alternative Effluent Disposal System

The relocated WRF will rely on a combination of effluent disposal methods including public access reclaimed water and a Class I deep injection well for wet weather, excess reclaimed water, or substandard reclaimed water disposal. It should be noted that although the deep injection well will be permitted for the disposal of secondary effluent, during wet weather or excess reclaimed water conditions, the effluent that will be discharged down the deep injection well will meet public access reclaimed water standards. Only during periods of substandard (reject) water that meets secondary effluent quality standards will the effluent not meet public access reclaimed water quality. In the event of a process upset, flow to the public access reclaimed water system will be stopped and all substandard effluent diverted to the existing 3.0 MG reject water ground storage tank and deep injection well disposal system.

6.3. Class I Reliability Design

As previously discussed, the treatment processes and equipment will be designed to meet the USEPA Class I requirements, so that when the largest individual unit process and/or piece of equipment is out of service the treatment performance will not be compromised. The relocated WRF will be designed to meet Class I Reliability requirements. The 5-stage MBR Bardenpho treatment process has two parallel treatment trains and backup mechanical equipment. The major treatment process will include a dual-stage screening system with two initial (first stage) screens, two fine (second stage) screens, one grit removal system, one in-line/side-line flow equalization tanks, two anaerobic tanks, two primary anoxic tanks, two primary aeration tanks, two secondary anoxic tanks, seven MBR process trains, three chlorine contact chambers, and two aerated sludge holding tanks. The chlorine contact chambers will provide over 50% of the design treatment capacity with one train is out of service. The seven MBR tanks allow for 75% of the design flow to be maintained when one train is out of service (n-1).

6.3.1. Electrical System

The electrical distribution system for the relocated WRF will include considerations for reliability, maintainability, and safety. To provide for a reliable electrical distribution system to meet USEPA Class I requirements, the facilities will be designed with two independent sources of power. One source of utility power will be from a nearby distribution grid and a diesel engine generator will provide the second source of required standby power. The generator will be capable of running the critical process equipment for the relocated WRF during a power outage.

To provide an electrical distribution system that is maintainable at this facility, it must be possible to take portions of the distribution out of service for routine maintenance. Therefore, electrical distribution system will provide two parallel systems that have interconnecting tie breakers. In the normal mode of operation, each system or main feeder will provide power for roughly one half of all the relocated WRF electrical loads; however, all critical relocated WRF loads will be carried by a single feeder if required to do so. The proposed electrical distribution system arrangement will offer protection from common mode failures, such as a single fault or loss of power that causes a disruption to the power distribution. The critical components that are required to maintain treatment include the following equipment:

- Headworks dual-stage screening
- Aeration blowers for MBR Bardenpho process
- Aeration blowers for sludge holding
- Membrane permeate pumps
- Feed-forward RAS pump
- Gaseous chlorine feed systems
- Effluent transfer pump station and controls
- Reclaimed water high service pump station and controls
- Deep injection well pumps (existing already generator onsite of pumps)

7. IMPLEMENTATION SCHEDULE

Implementing the relocated WRF will follow a normal progression of design and construction and include necessary time periods for regulatory review and plan approvals. The anticipated timeline of activities and milestones is presented in ***Table 7.1***.

Table 7.1 Implementation Schedule

Activity or Milestone	Duration (Months)
Preliminary Engineering Report and FDEP Facility Plan	1 ½
Funding Application and Coordination[1]	6
Request for Proposals (RFP) for WRF Design[1]	3
Detailed WRF Design and FDEP Permitting	12
WRF Bidding, Bid Evaluation, and Award Recommendation	4
Award Construction Contract	2
Construction[1]	30
Start-Up[1]	3

1 Activity may occur simultaneously

Appendix A:

Preliminary Biological Process Design Calculations and Mass Balance

BioWin Summary Report

Project Details

Plant Name	City of Vero Beach WRF	**Flow Units**	mgd
Project Name	Relocated WRF Process Design	**Volume Units**	Mil. Gal
Project Number	City of Vero Beach	**Area Units**	ft2
User Name	Matt.Tebow	**Length/Depth Units**	ft

Steady state solution Yes

Site Conditions

Liquid Temperature (deg C)	20
Ambient Air Temperature (deg C)	20
Ambient Air Relative Humidity (%)	20
Global Surface Pressure (kPa)	101.325

Process Summary

SRT Calculators Summary	
Name	Value (d)
SRT #0	20.09

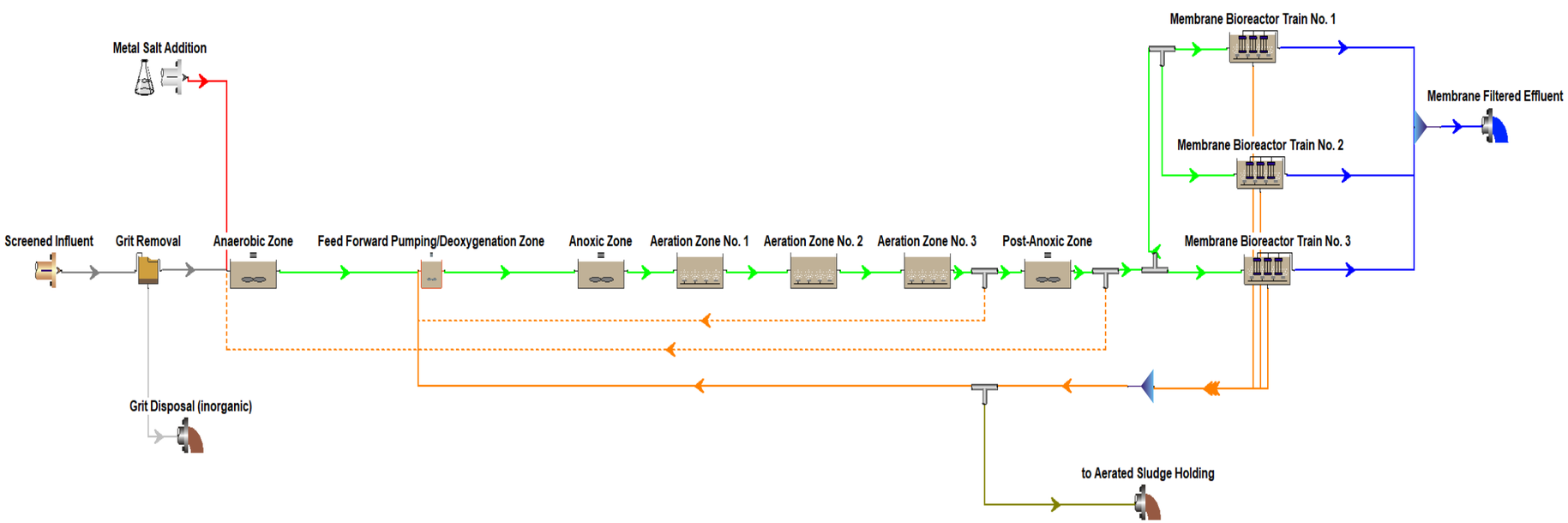

BioWin Tankage Summary
Volume Units: Mil. Gal

Grit Tanks	Name	Volume
	Grit Removal	0.1
	Group Total	**0.1**

Reactors	Name	Volume
	Aeration Zone No. 1	0.3
	Aeration Zone No. 2	0.3
	Aeration Zone No. 3	0.3
	Anaerobic Zone	0.1
	Anoxic Zone	0.2
	Feed Forward Pumping/Deoxygenation Zone	0.2
	Membrane Bioreactor Train No. 1	0.1
	Membrane Bioreactor Train No. 2	0.1
	Membrane Bioreactor Train No. 3	0.1
	Post-Anoxic Zone	0.2
	Group Total	**1.6**

Total Volume for All Units **1.7**

BioWin Mass Balance Summary

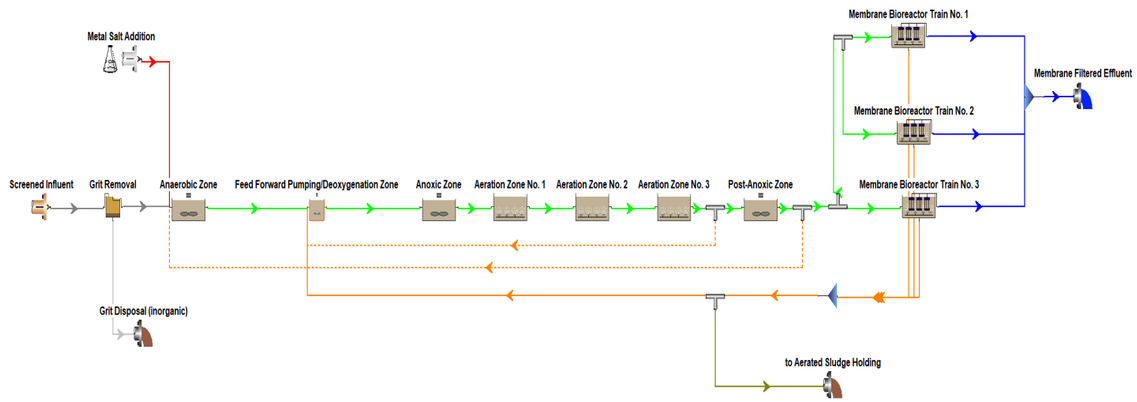

	Concentration and Mass Rate																			
Pipe Name	FLOW mgd	COD mg/L	COD lb/d	cBOD mg/L	cBOD lb/d	TSS mg/L	TSS lb/d	VSS mg/L	VSS lb/d	TKN mg/L	TKN lb/d	NH_4-N mg/L	NH_4-N lb/d	NO_X-N mg/L	NO_X-N lb/d	TP mg/L	TP lb/d	PO_4-P mg/L	PO_4-P lb/d
Aeration No. 1 to Aeration No. 2	40.9	8,212	2,806,177	1,748	597,478	7,227	2,469,694	5,641	1,927,703	463.2	158,300	1.6	550	1.5	504	280.5	95,863	1.92	657
Aeration No. 2 to Aeration No. 3	40.9	8,206	2,804,240	1,745	596,226	7,225	2,469,070	5,638	1,926,649	462.3	157,982	0.6	212	2.0	685	280.5	95,863	1.54	528
Aeration No. 2 to Post-Anoxic	40.9	8,201	2,802,534	1,741	595,098	7,223	2,468,431	5,635	1,925,686	461.9	157,851	0.3	101	1.7	588	280.5	95,863	1.26	429
Aeration No. 2 to Post-Anoxic	25.9	8,201	1,775,943	1,741	377,109	7,223	1,564,225	5,635	1,220,292	461.9	100,029	0.3	64	1.7	373	280.5	60,747	1.26	272
Anaerobic to Feed Forward Tank	11.2	5,621	527,757	1,233	115,720	4,888	458,883	3,830	359,609	322.9	30,319	11.2	1,056	0.0	0	189.2	17,761	4.54	426
Anoxic to Aeration No. 1	40.9	8,218	2,808,232	1,752	598,715	7,229	2,470,340	5,644	1,928,827	464.9	158,873	3.5	1,188	0.0	10	280.5	95,863	2.34	799
Denitrified MLR	7.5	8,198	513,133	1,740	108,877	7,222	452,015	5,634	352,615	461.9	28,911	0.5	32	0.8	49	280.5	17,558	1.28	80
Feed Forward to Anoxic	40.9	8,219	2,808,742	1,753	599,057	7,229	2,470,256	5,643	1,928,553	464.9	158,874	3.3	1,123	0.3	116	280.5	95,863	2.16	737
Grit Disposal	0.0	475	1	233	1	308,051	679	160	0	45.0	0	29.7	0	0.0	0	6.5	0	3.25	0
Headworks	3.8	475	14,869	233	7,292	195	6,103	160	5,007	45.0	1,408	29.7	929	0.0	0	6.5	203	3.25	102
Headworks to Anaerobic	3.7	475	14,868	233	7,291	173	5,423	160	5,007	45.0	1,408	29.7	929	0.0	0	6.5	203	3.25	102
MBR No. 1 and No. 2 Feed	12.3	8,198	840,657	1,740	178,371	7,222	740,529	5,634	577,682	461.9	47,365	0.5	52	0.8	80	280.5	28,764	1.28	131
MBR No. 1 Feed	6.1	8,198	420,328	1,740	89,185	7,222	370,264	5,634	288,841	461.9	23,682	0.5	26	0.8	40	280.5	14,382	1.28	66
MBR No. 1 Permeate	1.2	27	273	1	11	0	0	0	0	1.6	16	0.1	1	1.0	11	0.9	9	0.91	9
MBR No. 2 Feed	6.1	8,198	420,328	1,740	89,185	7,222	370,264	5,634	288,841	461.9	23,682	0.5	26	0.8	40	280.5	14,382	1.28	66
MBR No. 2 Permeate	1.2	27	273	1	11	0	0	0	0	1.6	16	0.1	1	1.0	11	0.9	9	0.91	9
MBR No. 3 Feed	6.2	8,198	421,591	1,740	89,453	7,222	371,376	5,634	289,709	461.9	23,754	0.5	26	0.8	40	280.5	14,425	1.28	66
MBR No. 3 Permeate	1.2	27	274	1	11	0	0	0	0	1.6	16	0.1	1	1.0	11	0.9	9	0.91	9
Membrane Filtered Effluent	3.7	27	821	1	33	0	0	0	0	1.6	48	0.1	2	1.0	32	0.9	28	0.91	28
Metal Salt Addition	0.0	0	0	0	0	0	0	0	0	0.0	0	0.0	0	0.0	0	0.0	0	0.00	0
Nitrified MLR	15.0	8,201	1,026,591	1,741	217,989	7,223	904,206	5,635	705,395	461.9	57,822	0.3	37	1.7	215	280.5	35,115	1.26	157
Post-Anoxic to MBR	25.9	8,198	1,775,380	1,740	376,700	7,222	1,563,920	5,634	1,220,005	461.9	100,030	0.5	110	0.8	170	280.5	60,747	1.28	277
Post-Anoxic to MBR	18.4	8,198	1,262,247	1,740	267,824	7,222	1,111,905	5,634	867,391	461.9	71,119	0.5	78	0.8	121	280.5	43,190	1.28	197
RAS	4.9	10,231	420,894	2,168	89,176	9,022	371,175	7,036	289,438	576.6	23,721	0.1	3	1.0	43	350.4	14,416	0.91	37
RAS	4.9	10,231	419,633	2,168	88,908	9,022	370,063	7,036	288,571	576.6	23,650	0.1	3	1.0	42	350.4	14,373	0.91	37
RAS	4.9	10,231	419,633	2,168	88,908	9,022	370,063	7,036	288,571	576.6	23,650	0.1	3	1.0	42	350.4	14,373	0.91	37
RAS	14.8	10,231	1,260,160	2,168	266,992	9,022	1,111,300	7,036	866,580	576.6	71,021	0.1	10	1.0	127	350.4	43,162	0.91	112
RAS	14.7	10,231	1,255,037	2,168	265,907	9,022	1,106,782	7,036	863,057	576.6	70,732	0.1	10	1.0	127	350.4	42,986	0.91	111
WAS	0.1	10,231	5,123	2,168	1,085	9,022	4,518	7,036	3,523	576.6	289	0.1	0	1.0	1	350.4	175	0.91	0

BioWin Influent Summary Note - Unless otherwise noted, mass rates use the following default for the unit system selected in BioWin: Mass Rate (lb/d)

	Concentration and Mass Rate																					
Influent Name	FLOW mgd	COD mg/L	COD lb/d	cBOD mg/L	cBOD lb/d	TSS mg/L	TSS lb/d	VSS mg/L	VSS lb/d	NH_4-N mg/L	NH_4-N lb/d	TKN mg/L	TKN lb/d	PO_4-P mg/L	PO_4-P lb/d	TP mg/L	TP lb/d	TS mg/L	TS lb/d	Alkalinity mmol/L	Alkalinity (as $CaCO_3$) mg/L	pH ---
Screened Influent	3.8	475	14,869	233	7,292	195	6,103	160	5,007	29.7	929	45.0	1,408	3.25	102	6.5	203	0.0	0	6.0	300	7.30
Average	3.8	475	14,869	233	7,292	195	6,103	160	5,007	29.7	929	45.0	1,408	3.25	102	6.5	203	0.0	0	6.0	300	
Total	3.8		14,869		7,292		6,103		5,007		929		1,408		102		203		203			

BioWin Effluent Summary Note - Unless otherwise noted, mass rates use the following default for the unit system selected in BioWin: Mass Rate (lb/d)

	Concentration and Mass Rate																										
Effluent Name	FLOW mgd	COD mg/L	COD lb/d	cBOD mg/L	cBOD lb/d	TSS mg/L	TSS lb/d	VSS mg/L	VSS lb/d	NO_2-N mg/L	NO_2-N lb/d	NO_3-N mg/L	NO_3-N lb/d	NO_X-N mg/L	NO_X-N lb/d	NH_4-N mg/L	NH_4-N lb/d	TN mg/L	TN lb/d	PO_4-P mg/L	PO_4-P lb/d	TP mg/L	TP lb/d	Alkalinity mmol/L	Alkalinity (as $CaCO_3$) mg/L	pH ---
Membrane Filtered Effluent	3.7	27	821	1	33	0	0	0	0	0.0	1	1.0	31	1.0	32	0.1	2	2.6	80	0.91	28	0.9	28	3.7	187	7.00
Total	513.0		30,793		14,811		12,365		10,044		1,906		2,852		242		412		290		329		32			

BioWin Sludge Summary

	Concentration and Mass Rate													
Sludge Name	FLOW mgd	TSS mg/L	TSS lb/d	VSS mg/L	VSS lb/d	TKN mg/L	TKN lb/d	TP mg/L	TP lb/d	VSS / TSS %	TSS TKN CONTENT %	TSS TP CONTENT %	VSS TKN CONTENT %	VSS TP CONTENT %
to Aerated Sludge Holding	0.1	9,022	4,518	7,036	3,523	577	289	350	175	78.0%	6.4%	3.9%	8.2%	5.0%
Grit Disposal (inorganic)	0.0	308,051	679	160	0	45	0	7	0	0.1%	0.0%	0.0%	28.1%	4.1%
Average		158,537	2,598	3,598	1,762	311	144	178	88	39.0%	3.2%	1.9%	18.2%	4.5%
Total	524.2		66,548		32,951		24,859		20,234					

Appendix B:

Existing Deep Injection Well, Reject Ground Storage Tank, and Generator Record Drawings

CITY OF VERO BEACH

INJECTION WELL IW-1

MARCH 2008

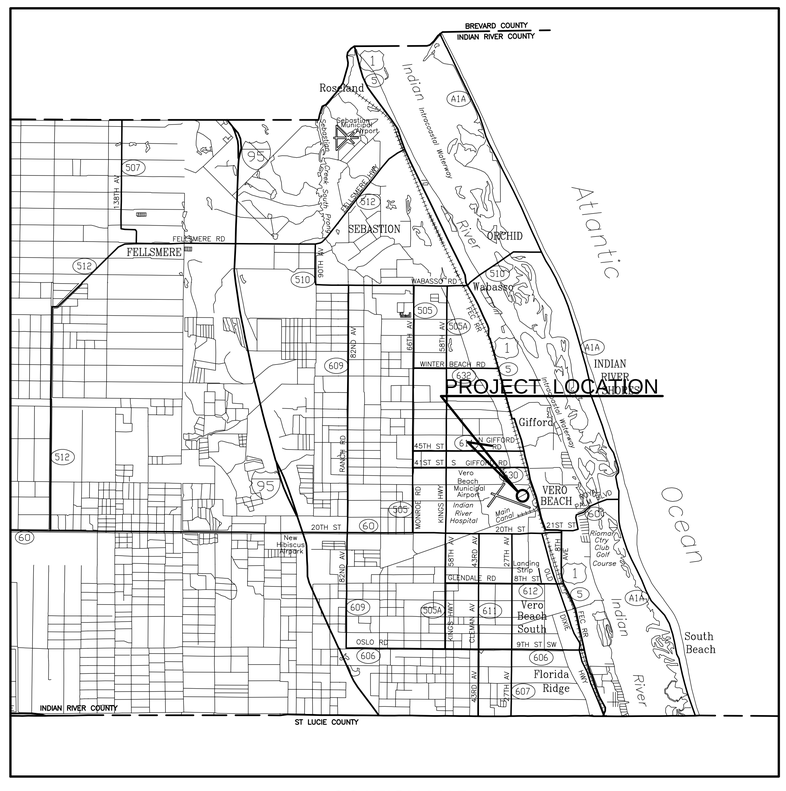

LOCATION MAP

CITY COUNCIL

Thomas White, Mayor
Sabin Abel, Vice Mayor
Debra Fromang, Council Member
Ken Daige, Council Member
Bill Fish, Council Member
James Gabbard, City Manager
Robert Bolton, Utility Director

INDEX OF SHEETS

SHEET NO.	DESCRIPTION
1	TITLE SHEET
2	SITE PLAN
2A	*REVISED SITE PLAN*
3	INJECTION WELL HEAD & PIPING PLAN, SECTION & DETAILS
4	MONITORING WELL HEAD & PIPING PLAN, SECTION & DETAILS
4A	*REVISED MONITORING WELL HEAD & PIPING PLAN, SECTION & DETAILS*
5	INJECTION WELL IW1 AND MONITOR WELL MW1 DETAILS
6	DRAINAGE PUMP STATION & SURGE TANK DETAILS

RECORD DRAWING

NOTE:
THIS RECORD DRAWING IS A COMPILED REPRESENTATION OF THE CONSTRUCTION PROJECT. THE RECORD DRAWING INFORMATION CONTAINED ON THIS DRAWING WAS OBTAINED FROM YOUNGQUIST BROTHERS, INC, BURDETTE & ASSOCIATES, INC., FLORIDA DESIGN CONTRACTORS AND MORGAN & ASSOCIATES. IT IS BELIEVED TO BE CORRECT TO THE BEST OF THE ENGINEER'S KNOWLEDGE, BUT ACCURACY OF THE INFORMATION CANNOT BE GUARANTEED. TEXT / DIMENSIONS SHOWN IN THIS STYLE FONT REPRESENTS RECORD DRAWING INFORMATION

REV.	ISSUED DATE	DESCRIPTION
2	11/29/10	ADDED RECORD DRAWING INFO.
1	06/23/10	ADDED RECORD DRAWING INFO.

KEYPLAN | SEAL | SEAL

ARCADIS
ARCADIS U.S., INC.
2081 Vista Parkway
West Palm Beach, Florida 33411
Tel: 561-697-7000, Fax: 561-697-7194
www.arcadis-us.com
Certificate No. EB00007917

CITY OF VERO BEACH
WATER TREATMENT PLANT
R.O. EXPANSION
IW 1

PROJECT MANAGER	DEPARTMENT MANAGER	LEAD DESIGN PROF.	CHECKED BY
W. REESE	T. JENSEN	B. KOUGH	
SHEET TITLE: TITLE SHEET		TASK/PHASE NUMBER: 00001/0000	DRAWN BY: T. STEFFER
		PROJECT NUMBER: WF083000	DRAWING NUMBER: 1 of 6

© 2008 ARCADIS U.S., INC.

Path\Name: G:\AProjects\WR\WF PROJECTS\083000-VBCH STORAGE RES IW PMP STATION\CADD\A1-PERMIT\RECORD DWG SET ST JOHNS\SHT 1.dwg
Plot Date\Time: 9/19/2011 9:07 AM Current Plotsyle: ACS-Mono-Imperial-CTB.ctbPage Set Up Name: ----
Acad Version: 2006
User Name: Steffer, Tony

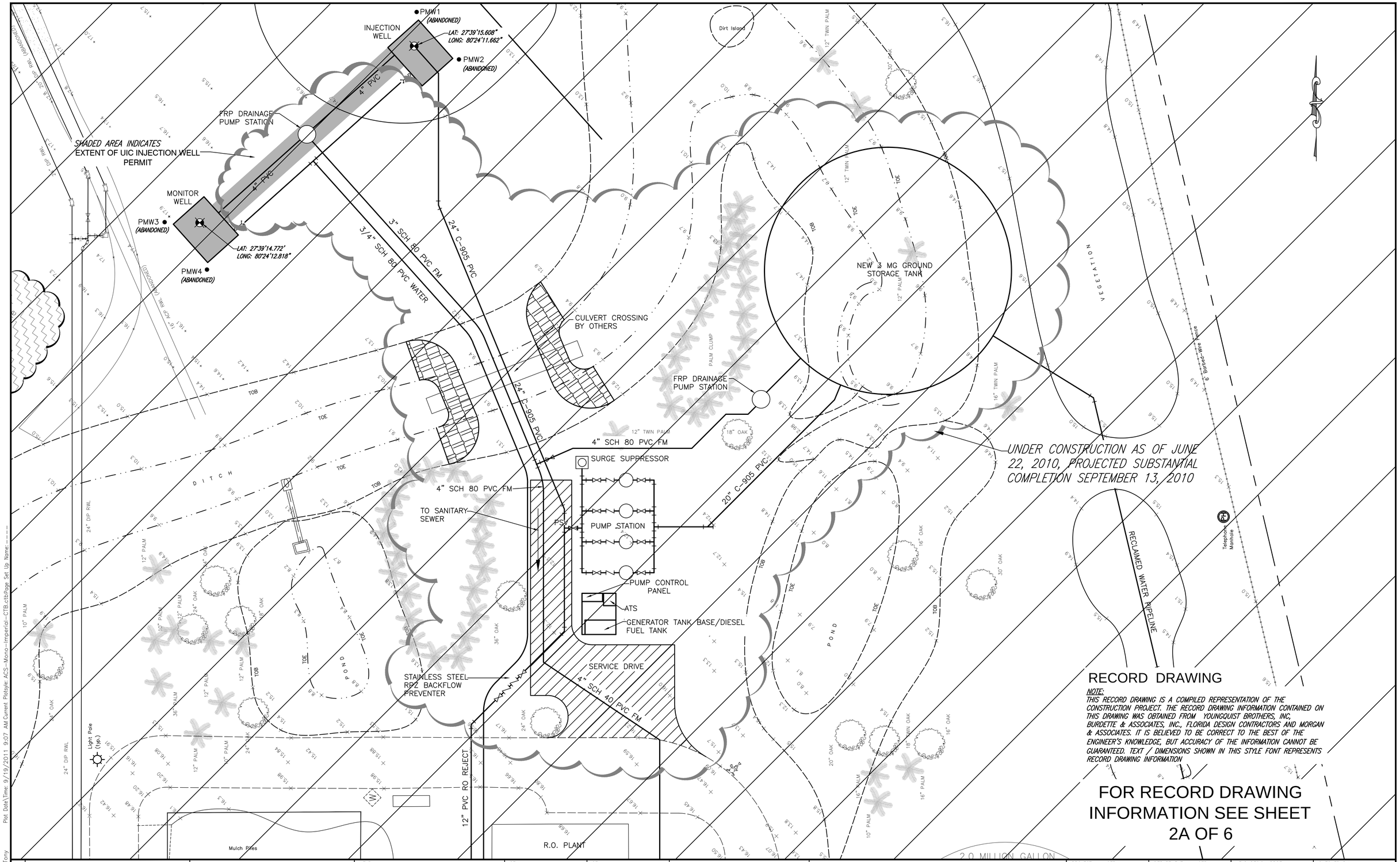

RECORD DRAWING

NOTE:
THIS RECORD DRAWING IS A COMPILED REPRESENTATION OF THE CONSTRUCTION PROJECT. THE RECORD DRAWING INFORMATION CONTAINED ON THIS DRAWING WAS OBTAINED FROM YOUNGQUIST BROTHERS, INC, BURDETTE & ASSOCIATES, INC., FLORIDA DESIGN CONTRACTORS AND MORGAN & ASSOCIATES. IT IS BELIEVED TO BE CORRECT TO THE BEST OF THE ENGINEER'S KNOWLEDGE, BUT ACCURACY OF THE INFORMATION CANNOT BE GUARANTEED. TEXT / DIMENSIONS SHOWN IN THIS STYLE FONT REPRESENTS RECORD DRAWING INFORMATION

FOR RECORD DRAWING INFORMATION SEE SHEET 2A OF 6

Path\Name: G:\AProjects\WR\WF PROJECTS\083000-VBCH STORAGE RES IW PMP STATION\CADD\A1-PERMIT\RECORD DWG SET ST JOHNS\SHT 2.dwg
Plot Date\Time: 9/19/2011 9:07 AM Current Plotsyle: ACS-Mono-Imperial-CTB.ctbPage Set Up Name: ----

Acad Version: 2006
User Name: Steffer, Tony

© 2008 ARCADIS U.S., INC.

0 20' 40' 60'
1"=20'

REV.	ISSUED DATE	DESCRIPTION
2	11/29/10	ADDED RECORD DRAWING INFO.
1	06/23/10	ADDED RECORD DRAWING INFO. ALL DETAILS CLOUDED ARE UNDER CONSTRUCTION AS OF JUNE 22, 2010. PROJECTED SUBSTANTIAL COMPLETION SEPTEMBER 13, 2010

KEYPLAN

SEAL

SEAL

ARCADIS
ARCADIS U.S., INC.
2081 Vista Parkway
West Palm Beach, Florida 33411
Tel: 561-697-7000, Fax: 561-697-7194
www.arcadis-us.com
Certificate No. EB00007917

CITY OF VERO BEACH
WATER TREATMENT PLANT
R.O. EXPANSION
IW 1

PROJECT MANAGER	DEPARTMENT MANAGER	LEAD DESIGN PROF.	CHECKED BY
W. REESE	T. JENSEN	B. KOUGH	
SHEET TITLE		TASK/PHASE NUMBER	DRAWN BY
SITE PLAN		00001/0000	T. STEFFER
		PROJECT NUMBER	DRAWING NUMBER
		WF083000	2 of 6

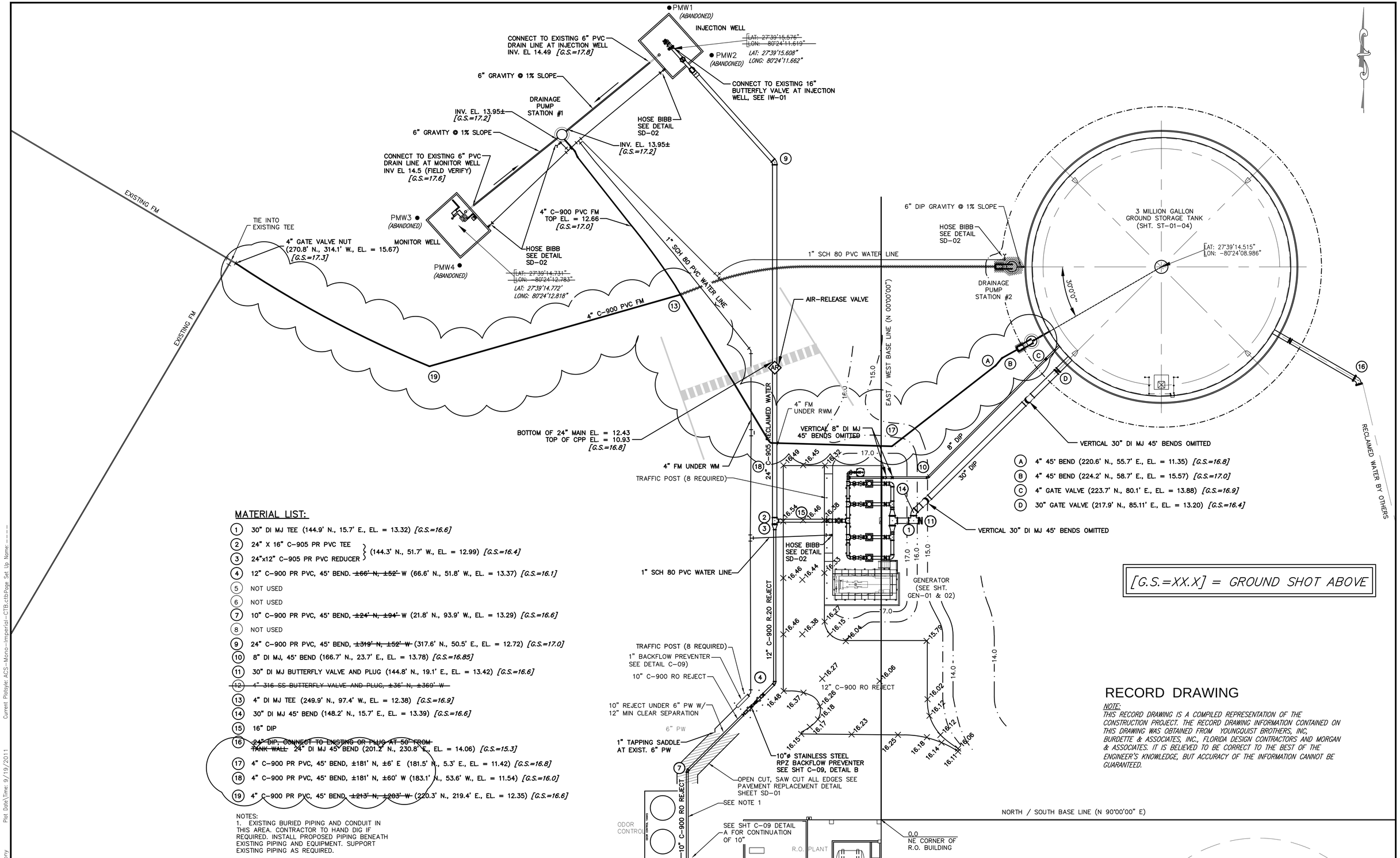

MATERIAL LIST:

1. 30" DI MJ TEE (144.9' N., 15.7' E., EL. = 13.32) *[G.S.=16.6]*
2. 24" X 16" C-905 PR PVC TEE } (144.3' N., 51.7' W., EL. = 12.99) *[G.S.=16.4]*
3. 24"x12" C-905 PR PVC REDUCER
4. 12" C-900 PR PVC, 45° BEND. ~~±66' N, ±52'~~ W (66.6' N., 51.8' W., EL. = 13.37) *[G.S.=16.1]*
5. NOT USED
6. NOT USED
7. 10" C-900 PR PVC, 45° BEND, ~~±24' N, ±94'~~ W (21.8' N., 93.9' W., EL. = 13.29) *[G.S.=16.6]*
8. NOT USED
9. 24" C-900 PR PVC, 45° BEND, ~~±319' N, ±52' W~~ (317.6' N., 50.5' E., EL. = 12.72) *[G.S.=17.0]*
10. 8" DI MJ, 45° BEND (166.7' N., 23.7' E., EL. = 13.78) *[G.S.=16.85]*
11. 30" DI MJ BUTTERFLY VALVE AND PLUG (144.8' N., 19.1' E., EL. = 13.42) *[G.S.=16.6]*
12. ~~4" 316 SS BUTTERFLY VALVE AND PLUG, ±36' N, ±369' W~~
13. 4" DI MJ TEE (249.9' N., 97.4' W., EL. = 12.38) *[G.S.=16.9]*
14. 30" DI MJ 45° BEND (148.2' N., 15.7' E., EL. = 13.39) *[G.S.=16.6]*
15. 16" DIP
16. ~~24" DIP, CONNECT TO EXISTING OR PLUG AT 50' FROM TANK WALL~~ 24" DI MJ 45° BEND (201.2' N., 230.8' E., EL. = 14.06) *[G.S.=15.3]*
17. 4" C-900 PR PVC, 45° BEND, ±181' N, ±6' E (181.5' N., 5.3' E., EL. = 11.42) *[G.S.=16.8]*
18. 4" C-900 PR PVC, 45° BEND, ±181' N, ±60' W (183.1' N., 53.6' W., EL. = 11.54) *[G.S.=16.0]*
19. 4" C-900 PR PVC, 45° BEND, ~~±213' N, ±203' W~~ (220.3' N., 219.4' E., EL. = 12.35) *[G.S.=16.6]*

NOTES:
1. EXISTING BURIED PIPING AND CONDUIT IN THIS AREA. CONTRACTOR TO HAND DIG IF REQUIRED. INSTALL PROPOSED PIPING BENEATH EXISTING PIPING AND EQUIPMENT. SUPPORT EXISTING PIPING AS REQUIRED.

RECORD DRAWING

NOTE:
THIS RECORD DRAWING IS A COMPILED REPRESENTATION OF THE CONSTRUCTION PROJECT. THE RECORD DRAWING INFORMATION CONTAINED ON THIS DRAWING WAS OBTAINED FROM YOUNGQUIST BROTHERS, INC, BURDETTE & ASSOCIATES, INC., FLORIDA DESIGN CONTRACTORS AND MORGAN & ASSOCIATES. IT IS BELIEVED TO BE CORRECT TO THE BEST OF THE ENGINEER'S KNOWLEDGE, BUT ACCURACY OF THE INFORMATION CANNOT BE GUARANTEED.

Path\Name: G:\AProjects\WF\WF PROJECTS\083000-VBCH STORAGE RES IW PMP STATION\CADD\A1-PERMIT\RECORD DWG SET ST JOHNS\sht 2a.dwg
Plot Date\Time: 9/19/2011 Current Plotsyle: ACS-Mono-Imperial-CTB.ctb Page Set Up Name: ----
Acad Version: 2006 User Name: Steffer, Tony

© 2008 ARCADIS U.S., INC.

0 20' 40' 60'
1"=20'

REVISED OCT. 30, 2009

REV. ISSUED DATE DESCRIPTION

KEYPLAN

SEAL

SEAL

ARCADIS
ARCADIS U.S., INC.
2081 Vista Parkway
West Palm Beach, Florida 33411
Tel: 561-697-7000, Fax: 561-697-7194
www.arcadis-us.com
Certificate No. EB00007917

CITY OF VERO BEACH
WATER TREATMENT PLANT
R.O. EXPANSION
IW 1

PROJECT MANAGER	DEPARTMENT MANAGER	LEAD DESIGN PROF.	CHECKED BY
W. REESE	T. JENSEN	B. KOUGH	
SHEET TITLE		TASK/PHASE NUMBER	DRAWN BY
REVISED SITE PLAN		00001/0000	S. STERN
		PROJECT NUMBER	DRAWING NUMBER
		WF083000	2A of 6

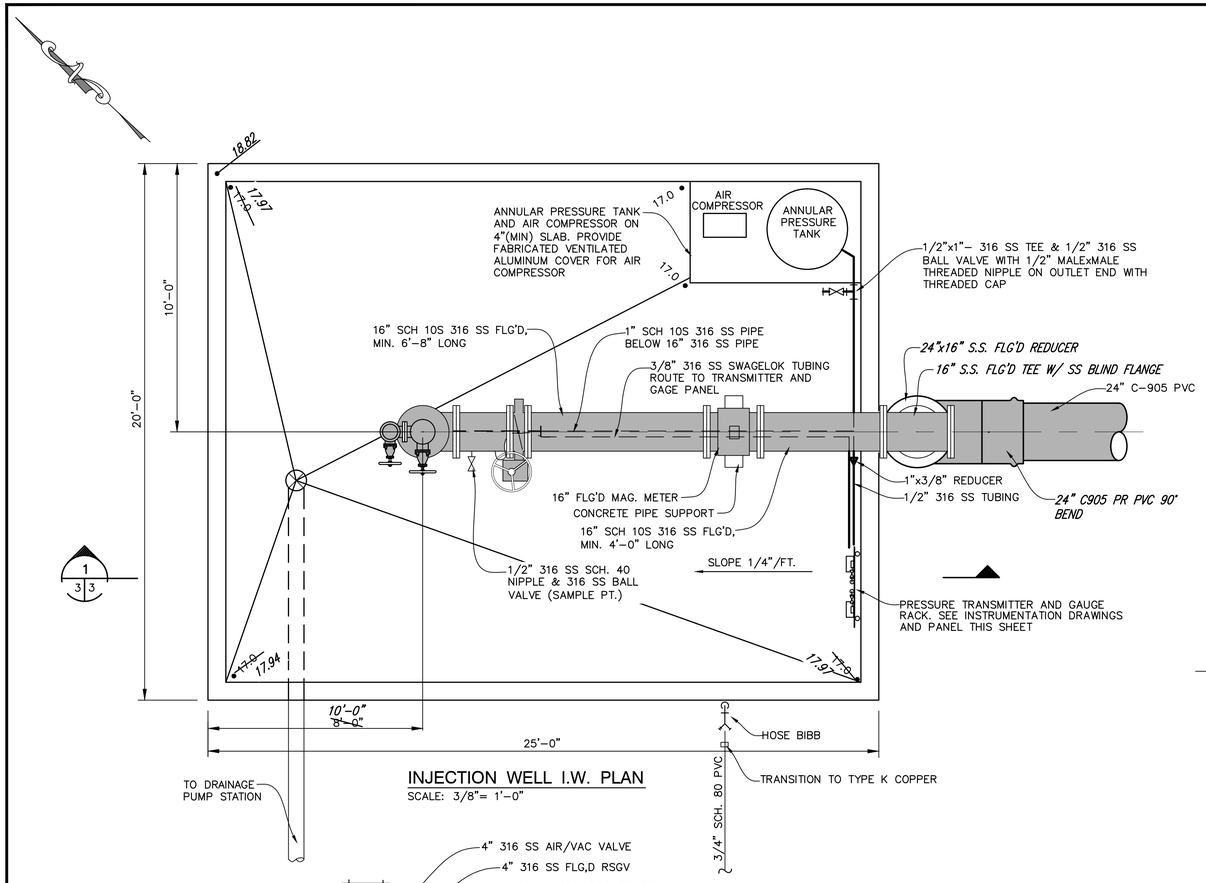

INJECTION WELL I.W. PLAN

SCALE: 3/8"= 1'–0"

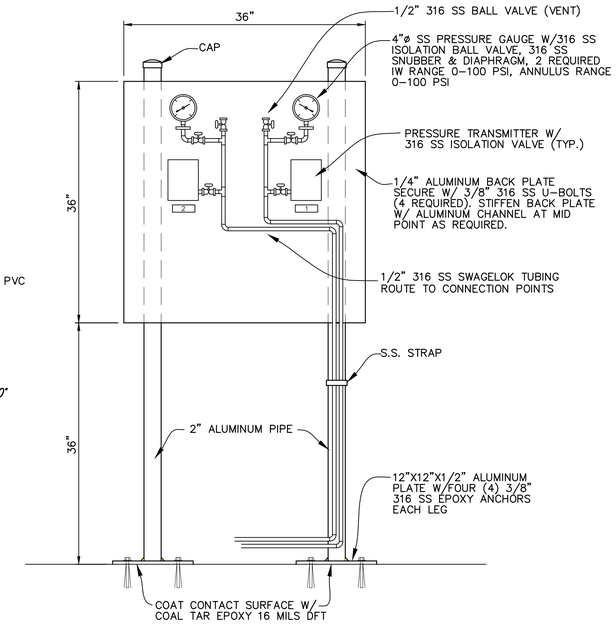

PRESSURE GAUGE / TRANSMITTER PANEL - ROIW-1

SCALE: NONE

NOTE:

PROVIDE BLACK LAMCOID NAMEPLATES AS FOLLOWS:

INJECTION WELL

1. INJECTION WELL PRESSURE
2. ANNULUS PRESSURE

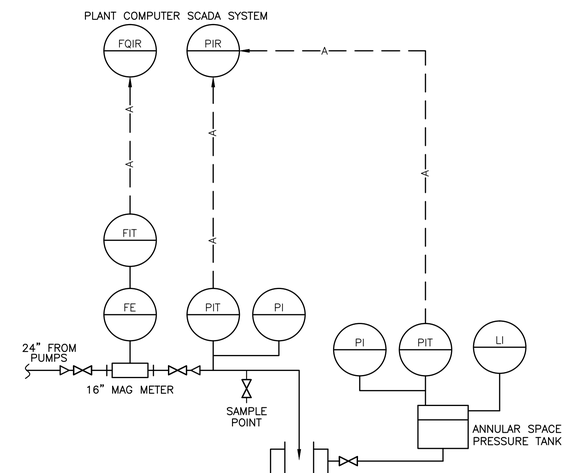

INJECTION WELL IW-1 P & I DIAGRAM

SCALE: NONE

RECORD DRAWING

NOTE:

THIS RECORD DRAWING IS A COMPILED REPRESENTATION OF THE CONSTRUCTION PROJECT. THE RECORD DRAWING INFORMATION CONTAINED ON THIS DRAWING WAS OBTAINED FROM YOUNGQUIST BROTHERS, INC, BURDETTE & ASSOCIATES, INC., FLORIDA DESIGN CONTRACTORS AND MORGAN & ASSOCIATES. IT IS BELIEVED TO BE CORRECT TO THE BEST OF THE ENGINEER'S KNOWLEDGE, BUT ACCURACY OF THE INFORMATION CANNOT BE GUARANTEED. TEXT / DIMENSIONS SHOWN IN THIS STYLE FONT REPRESENTS RECORD DRAWING INFORMATION

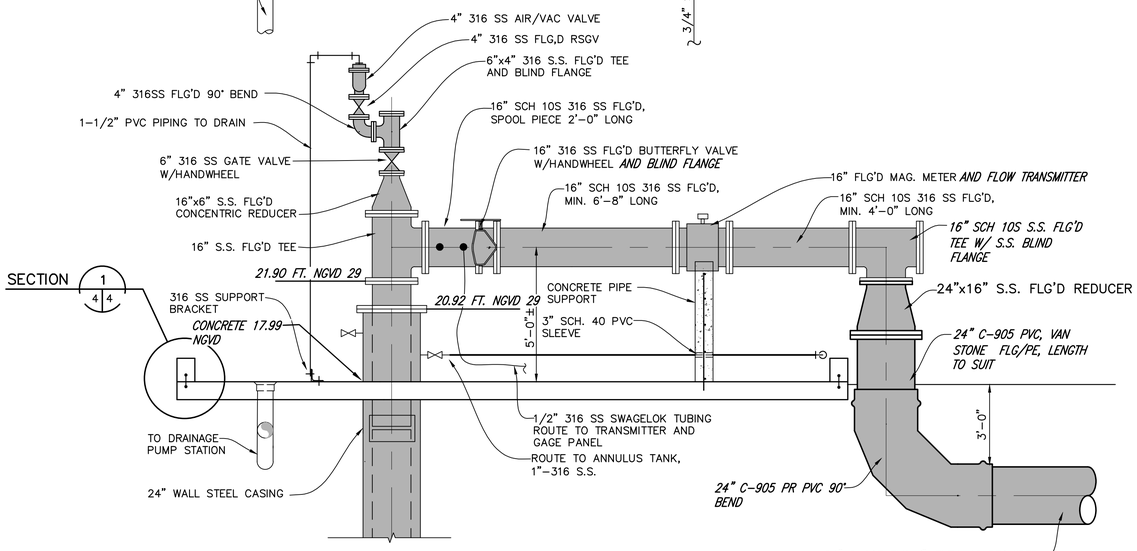

SECTION 1 / 3 3

SCALE: 3/8"= 1'–0"

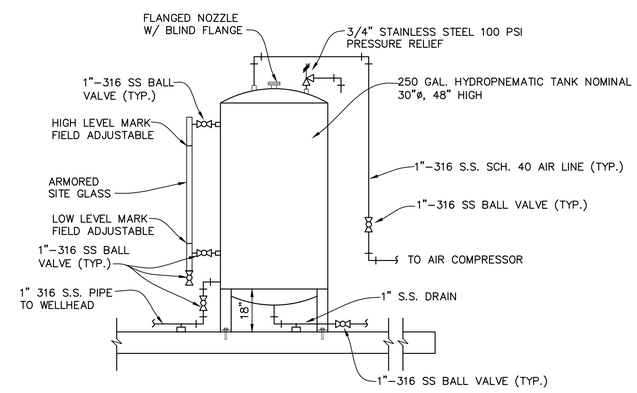

WELL ANNULAR PRESSURE TANK DETAIL

SCALE: NONE

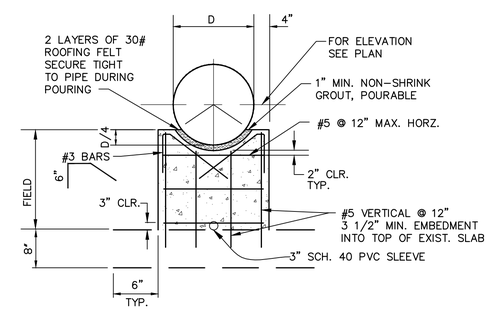

CONCRETE PIPE SUPPORT DETAIL

SCALE: NONE

NOTES:

1. 8" SADDLE THICKNESS W/ ONE (1) LAYER OF STEEL, CENTERED IN SUPPORT.

Path\Name: G:\AProjects\WR\WF PROJECTS\083000-VBCH STORAGE RES IW PMP STATION\CADD\A1-PERMIT\RECORD DWG SET ST JOHNS\SHT 3-4.dwg
Plot Date\Time: 9/19/2011 9:08 AM Current Plotstyle: ACS-Mono-Imperial-CTB.ctbPage Set Up Name: ----
Acad Version: 2006
User Name: Steffer, Tony

© 2008 ARCADIS U.S., INC.

0' 1' 2' 3' 4'
3/4"=1'–0"
0' 1' 2' 3' 4' 8'
3/8"=1'–0"

REV.	ISSUED DATE	DESCRIPTION
2	11/29/10	ADDED RECORD DRAWING INFO.
1	06/23/10	ADDED RECORD DRAWING INFO.

KEYPLAN | SEAL | SEAL

ARCADIS
ARCADIS U.S., INC.
2081 Vista Parkway
West Palm Beach, Florida 33411
Tel: 561-697-7000, Fax: 561-697-7194
www.arcadis-us.com
Certificate No. EB00007917

CITY OF VERO BEACH
WATER TREATMENT PLANT
R.O. EXPANSION
IW 1

PROJECT MANAGER	DEPARTMENT MANAGER	LEAD DESIGN PROF.	CHECKED BY
W. REESE	T. JENSEN	B. KOUGH	
SHEET TITLE		TASK/PHASE NUMBER	DRAWN BY
INJECTION WELL HEAD & PIPING PLAN, SECTION AND DETAILS		00001/0000	T. STEFFER
		PROJECT NUMBER	DRAWING NUMBER
		WF083000	3 of 6

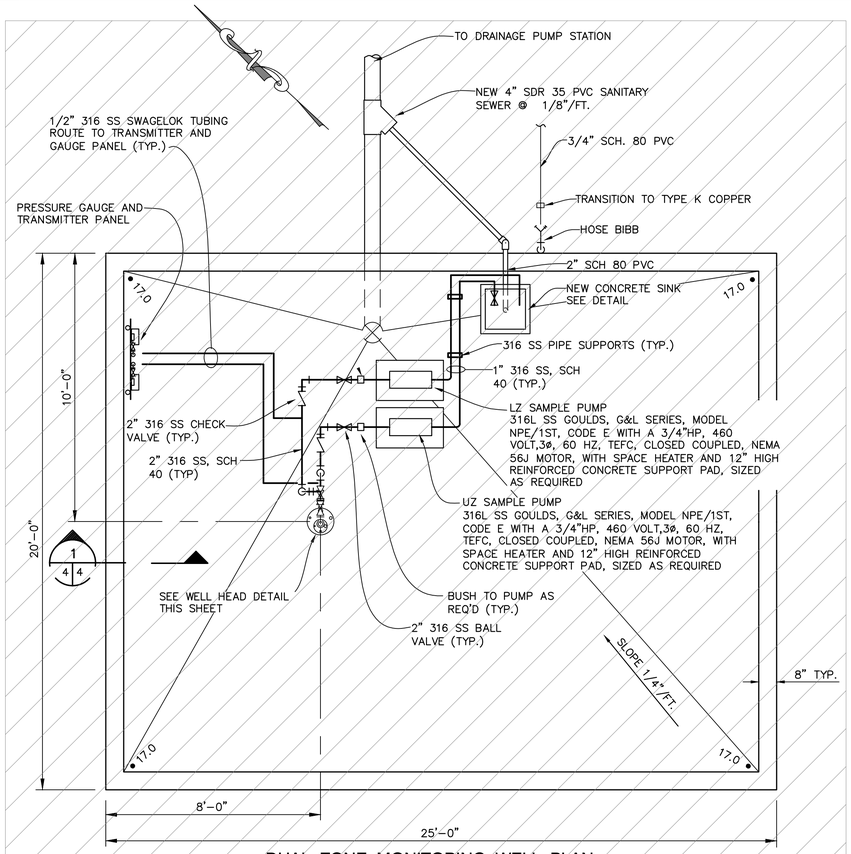

DUAL ZONE MONITORING WELL PLAN

SCALE: 3/8"= 1'-0"

SEE SHEET 4A OF 6 – THIS DETAIL WAS MODIFIED FROM ORIGINAL DESIGN FROM A DUAL ZONE TO A SINGLE ZONE

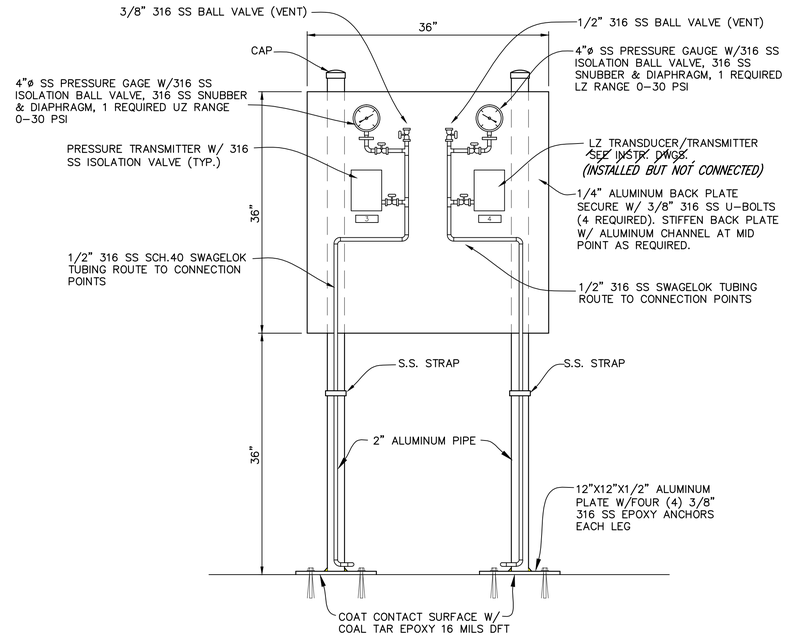

PRESSURE GAUGE / TRANSMITTER PANEL - MONITORING WELL

SCALE: NONE

NOTE:

PROVIDE BLACK LAMCOID NAMEPLATES AS FOLLOWS:

3. UPPER ZONE PRESSURE
~~4. LOWER ZONE LEVEL~~

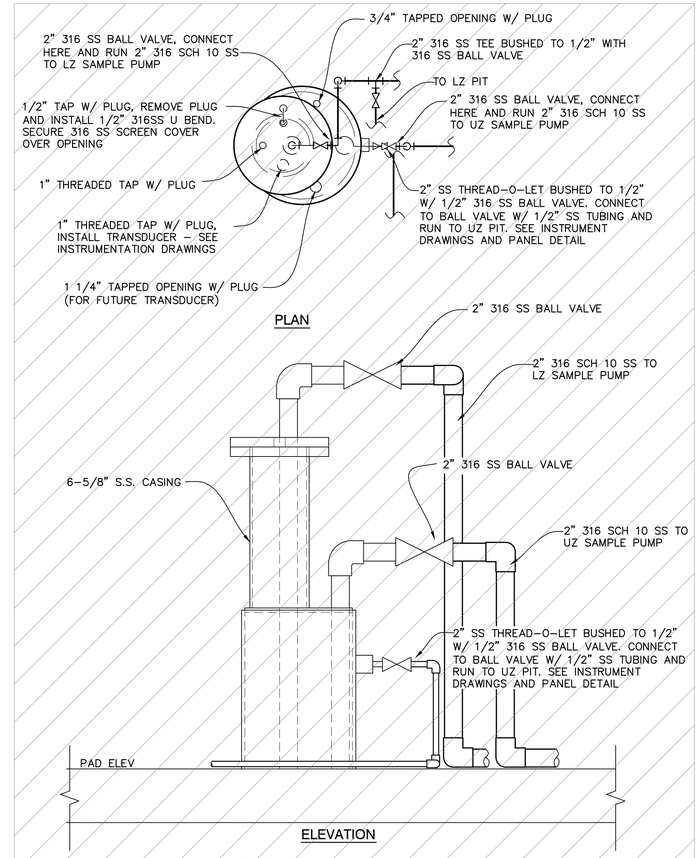

MONITORING WELL HEAD DETAIL

SCALE: NONE

SEE SHEET 4A OF 6 – THIS DETAIL WAS MODIFIED FROM ORIGINAL DESIGN FROM A DUAL ZONE TO A SINGLE ZONE

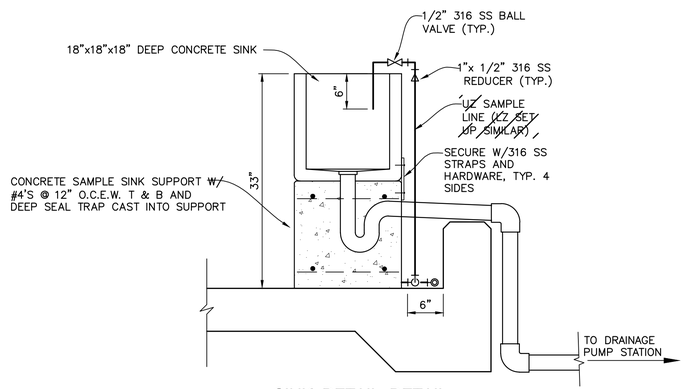

SINK DETAIL DETAIL

SCALE: NONE

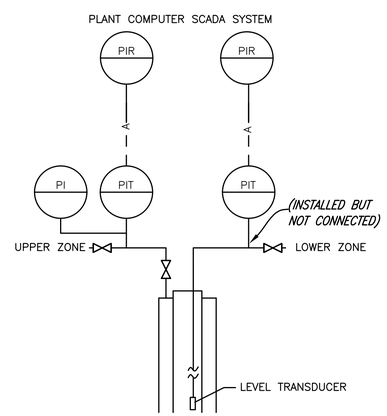

MONITORING WELL P & I DIAGRAM

SCALE: NONE

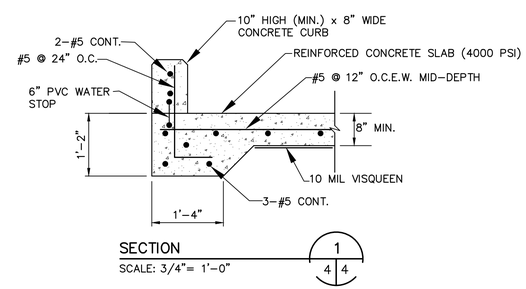

SECTION

SCALE: 3/4"= 1'-0"

RECORD DRAWING

NOTE:

THIS RECORD DRAWING IS A COMPILED REPRESENTATION OF THE CONSTRUCTION PROJECT. THE RECORD DRAWING INFORMATION CONTAINED ON THIS DRAWING WAS OBTAINED FROM YOUNGQUIST BROTHERS, INC, BURDETTE & ASSOCIATES, INC., FLORIDA DESIGN CONTRACTORS AND MORGAN & ASSOCIATES. IT IS BELIEVED TO BE CORRECT TO THE BEST OF THE ENGINEER'S KNOWLEDGE, BUT ACCURACY OF THE INFORMATION CANNOT BE GUARANTEED. TEXT / DIMENSIONS SHOWN IN THIS STYLE FONT REPRESENTS RECORD DRAWING INFORMATION

Path\Name: G:\AProjects\WR\WF PROJECTS\083000-VBCH STORAGE RES IW PMP STATION\CADD\A1-PERMIT\RECORD DWG SET ST JOHNS\SHT 3-4.dwg
Plot Date\Time: 9/19/2011 9:08 AM Current Plotsyle: ACS-Mono-Imperial-CTB.ctbPage Set Up Name: ----
Acad Version: 2006
User Name: Steffer, Tony

© 2008 ARCADIS U.S., INC.

0' 1' 2' 3' 4'
3/4"=1'-0"
0' 1' 2' 3' 4' 8'
3/8"=1'-0"

REV.	ISSUED DATE	DESCRIPTION
2	11/29/10	ADDED RECORD DRAWING INFO.
1	06/23/10	ADDED RECORD DRAWING INFO.

KEYPLAN | SEAL | SEAL

ARCADIS
ARCADIS U.S., INC.
2081 Vista Parkway
West Palm Beach, Florida 33411
Tel: 561-697-7000, Fax: 561-697-7194
www.arcadis-us.com
Certificate No. EB00007917

CITY OF VERO BEACH
WATER TREATMENT PLANT
R.O. EXPANSION
IW 1

PROJECT MANAGER	DEPARTMENT MANAGER	LEAD DESIGN PROF.	CHECKED BY
W. REESE	T. JENSEN	B. KOUGH	
SHEET TITLE: MONITORING WELL HEAD & PIPING PLAN, SECTION & DETAILS		TASK/PHASE NUMBER: 00001/0000	DRAWN BY: T. STEFFER
		PROJECT NUMBER: WF083000	DRAWING NUMBER: 4 of 6

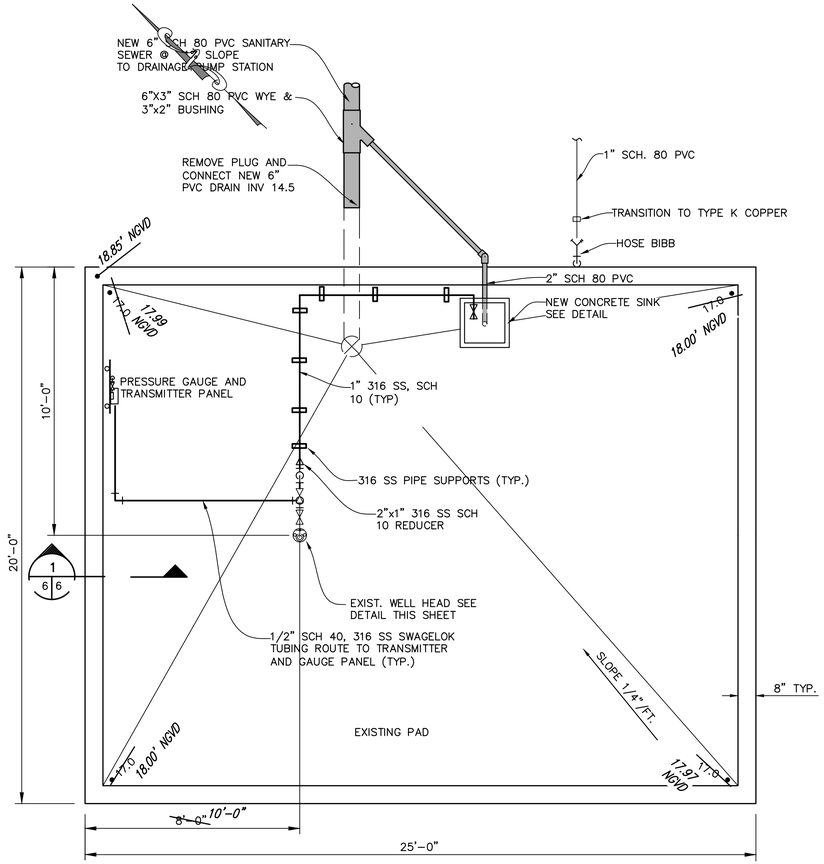

SINGLE ZONE MONITORING WELL PLAN

SCALE: 3/8"= 1'-0"

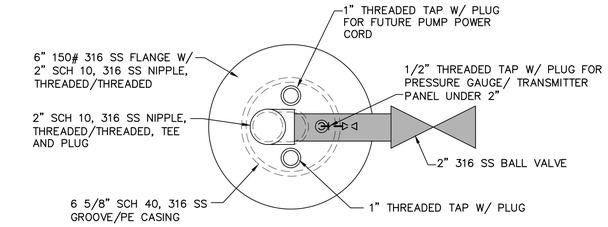

PLAN

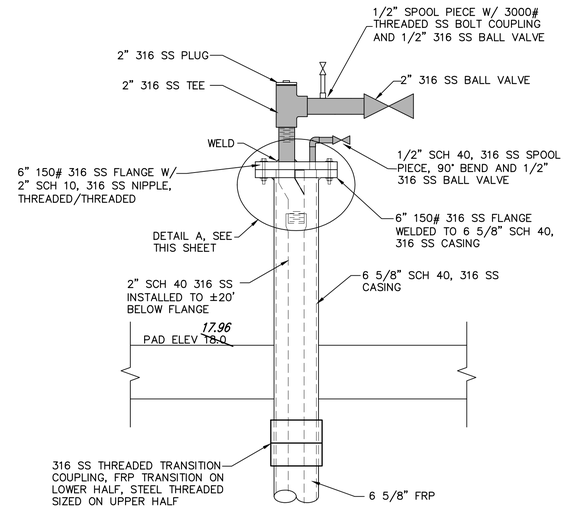

ELEVATION

MONITORING WELL HEAD DETAIL

SCALE: NONE

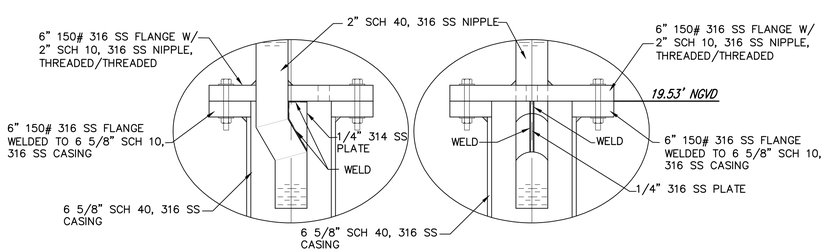

DETAIL A 6|6

SCALE: NONE

RECORD DRAWING

NOTE:

THIS RECORD DRAWING IS A COMPILED REPRESENTATION OF THE CONSTRUCTION PROJECT. THE RECORD DRAWING INFORMATION CONTAINED ON THIS DRAWING WAS OBTAINED FROM YOUNGQUIST BROTHERS, INC, BURDETTE & ASSOCIATES, INC., FLORIDA DESIGN CONTRACTORS AND MORGAN & ASSOCIATES. IT IS BELIEVED TO BE CORRECT TO THE BEST OF THE ENGINEER'S KNOWLEDGE, BUT ACCURACY OF THE INFORMATION CANNOT BE GUARANTEED. TEXT / DIMENSIONS SHOWN IN THIS STYLE FONT REPRESENTS RECORD DRAWING INFORMATION

Path\Name: G:\AProjects\WR\WF PROJECTS\083000-VBCH STORAGE RES IW PMP STATION\CADD\A1-PERMIT\RECORD DWG SET ST JOHNS\SHT 3-4.dwg
Plot Date\Time: 9/19/2011 9:08 AM Current Plotsyle: ACS-Mono-Imperial-CTB.ctbPage Set Up Name: ----
Acad Version: 2006
User Name: Steffer, Tony

© 2008 ARCADIS U.S., INC.

0' 1' 2' 3' 4' 8'
3/8"=1'-0"

REV.	ISSUED DATE	DESCRIPTION
2	11/29/10	ADDED RECORD DRAWING INFO.
1	06/23/10	ADDED RECORD DRAWING INFO.

KEYPLAN

SEAL

SEAL

ARCADIS
ARCADIS U.S., INC.
2081 Vista Parkway
West Palm Beach, Florida 33411
Tel: 561-697-7000, Fax: 561-697-7194
www.arcadis-us.com
Certificate No. EB00007917

CITY OF VERO BEACH
WATER TREATMENT PLANT
R.O. EXPANSION
IW 1

PROJECT MANAGER	DEPARTMENT MANAGER	LEAD DESIGN PROF.	CHECKED BY
W. REESE	T. JENSEN	B. KOUGH	
SHEET TITLE: REVISED MONITORING WELL HEAD PLAN AND SECTION		TASK/PHASE NUMBER: 00001/0000	DRAWN BY: T. STEFFER
		PROJECT NUMBER: WF083000	DRAWING NUMBER: 4A of 6

PROPOSED INJECTION WELL IW1

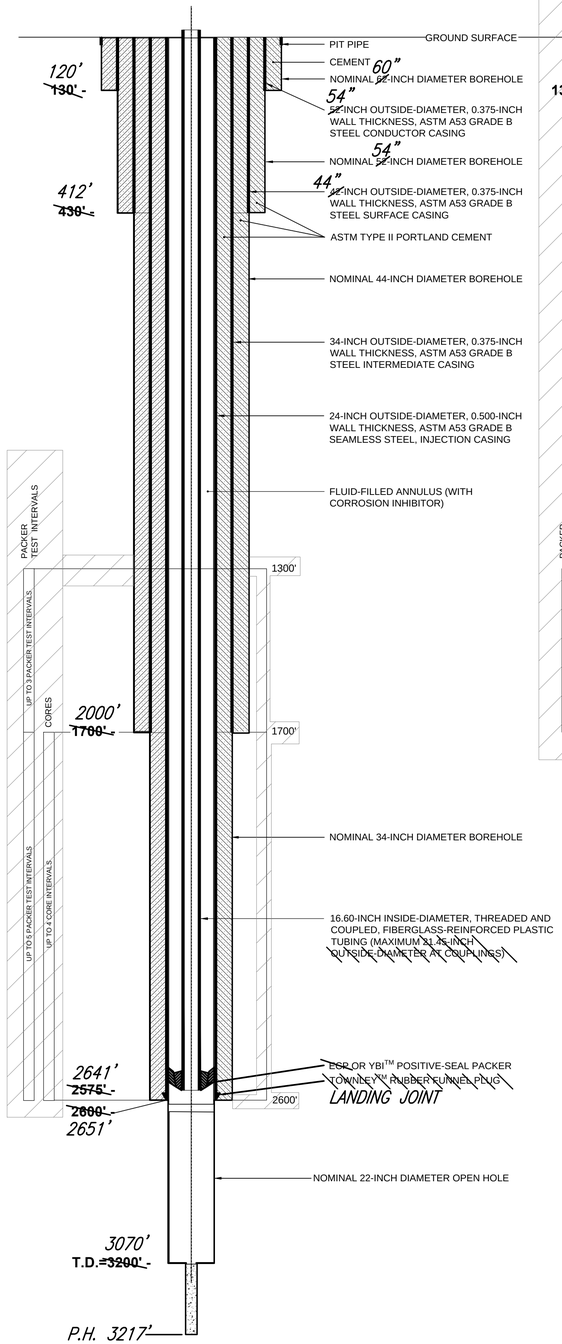

PROPOSED DEEP MONITOR WELL MW1

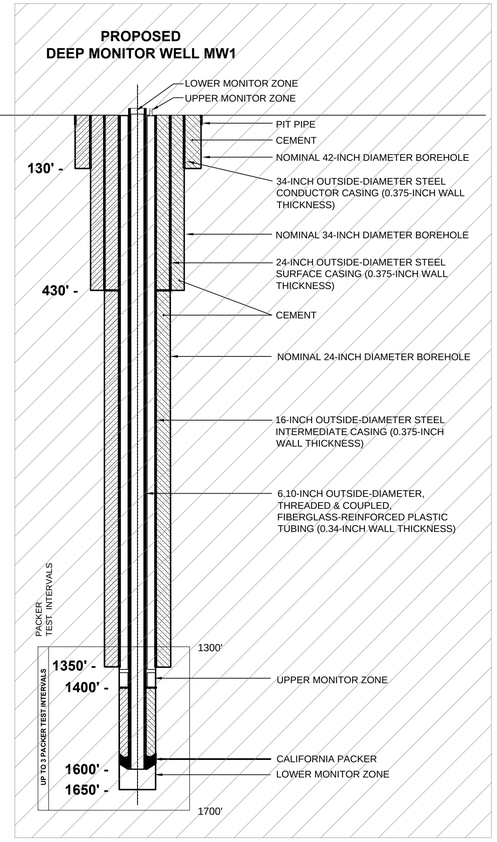

MONITOR WELL MODIFIED FROM DUAL ZONE TO SINGLE ZONE. SEE REVISED DETAIL THIS SHEET

SINGLE-ZONE DEEP MONITOR WELL MW1

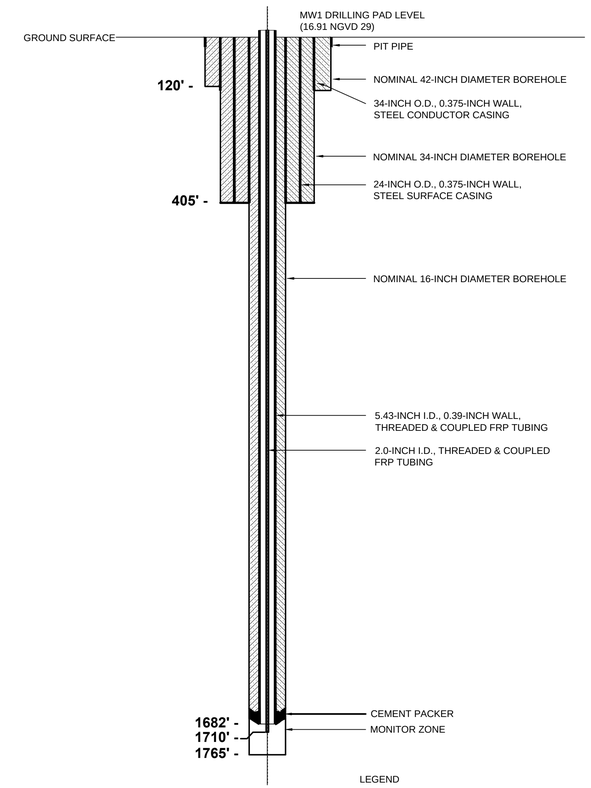

LEGEND

ASTM C150 TYPE 1/11 PORTLAND CEMENT

NOTES:
1. O.D. INDICATES OUTSIDE DIAMETER
2. I.D. INDICATES INSIDE DIAMETER
3. FRP INDICATES FIBERGLASS REINFORCED PLASTIC
4. T.D. INDICATES TOTAL DEPTH
5. ALL STEEL CASINGS MEET ASTM A53, GRADE B STANDARDS UNLESS NOTED OTHERWISE.

RECORD DRAWING

NOTE:
THIS RECORD DRAWING IS A COMPILED REPRESENTATION OF THE CONSTRUCTION PROJECT. THE RECORD DRAWING INFORMATION CONTAINED ON THIS DRAWING WAS OBTAINED FROM YOUNGQUIST BROTHERS, INC, BURDETTE & ASSOCIATES, INC., FLORIDA DESIGN CONTRACTORS AND MORGAN & ASSOCIATES. IT IS BELIEVED TO BE CORRECT TO THE BEST OF THE ENGINEER'S KNOWLEDGE, BUT ACCURACY OF THE INFORMATION CANNOT BE GUARANTEED. TEXT / DIMENSIONS SHOWN IN THIS STYLE FONT REPRESENTS RECORD DRAWING INFORMATION

Path\Name: G:\AProjects\WR\WF PROJECTS\083000-VBCH STORAGE RES IW PMP STATION\CADD\A1-PERMIT\RECORD DWG SET ST JOHNS\SHT 5-6.dwg
Plot Date\Time: 9/19/2011 9:08 AM Current Plotstyle: ACS-Mono-Imperial-CTB.ctbPage Set Up Name: ----
Acad Version: 2006
User Name: Steffer, Tony
© 2008 ARCADIS U.S., INC.

REV.	ISSUED	DATE	DESCRIPTION
1		06/23/10	ADDED RECORD DRAWING INFO.

KEYPLAN | SEAL | SEAL

ARCADIS
ARCADIS U.S., INC.
2081 Vista Parkway
West Palm Beach, Florida 33411
Tel: 561-697-7000, Fax: 561-697-7194
www.arcadis-us.com
Certificate No. EB00007917

CITY OF VERO BEACH
WATER TREATMENT PLANT
R.O. EXPANSION
IW 1

PROJECT MANAGER	DEPARTMENT MANAGER	LEAD DESIGN PROF.	CHECKED BY
W. REESE	T. JENSEN	B. KOUGH	
SHEET TITLE		TASK/PHASE NUMBER	DRAWN BY
INJECTION WELL IW1 AND MONITOR WELL MW1 DETAILS		00001/0000	T. STEFFER
		PROJECT NUMBER	DRAWING NUMBER
		WF083000	5 of 6

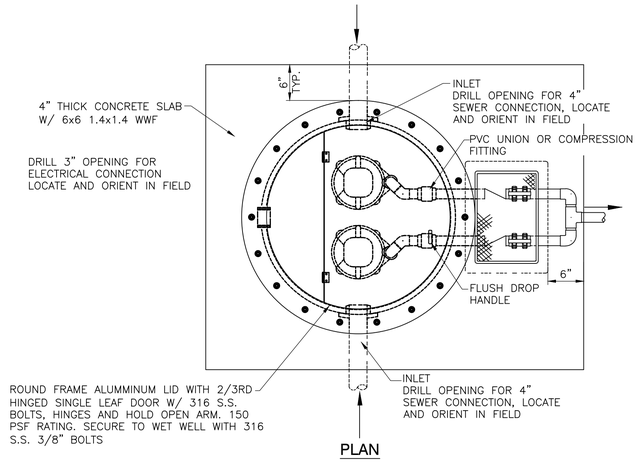

PLAN

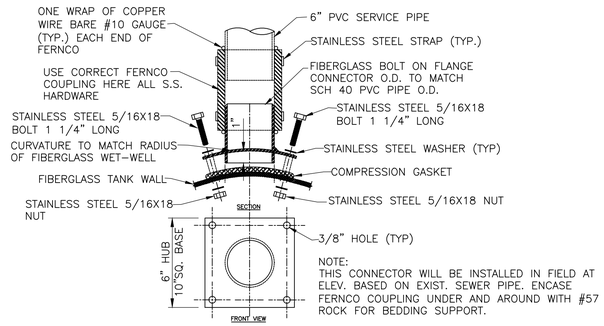

TYPICAL WET WELL GRAVITY CONNECTOR HUB

SCALE: NONE

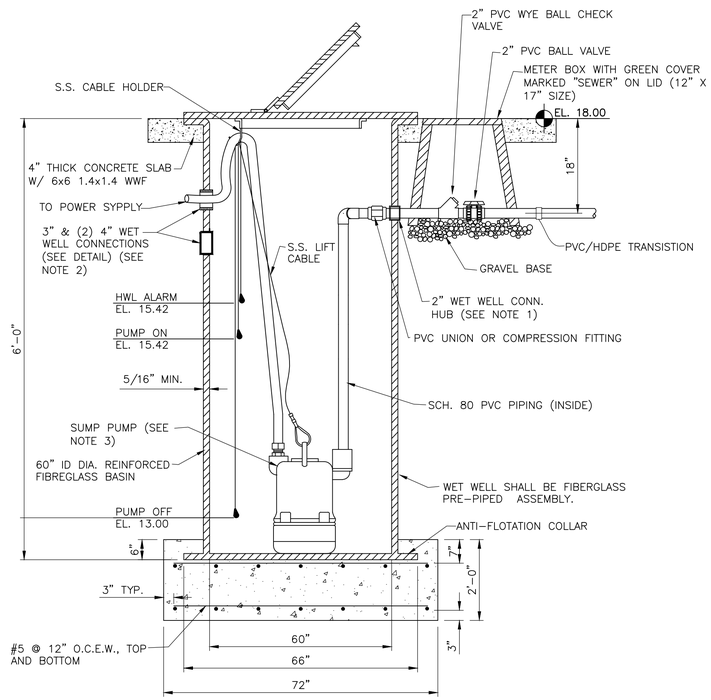

ELEVATION

DUPLEX DRAINAGE PUMP STATION

SCALE: NONE

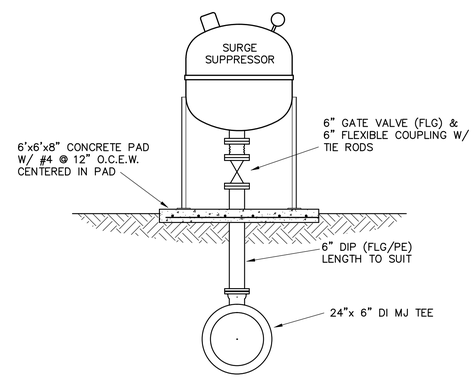

SURGE SUPPRESSOR DETAIL

SCALE: NONE

NOTES:

1. CONNECTOR HUBS FOR WET-WELL FORCE MAIN CONNECTION ARE FACTORY INSTALLED. USE 2" PVC SCH 80 NIPPLES.
2. CONNECTION TO WET-WELL FOR ELECTRICAL AND SEWER OPENINGS SHALL BE INSTALLED BY CONTRACTOR WITH 3" & 4" RUBBER GROMMETS.
3. PUMP SPECIFICATIONS:
   FLYGT READY 8 (BS-2004.211 1.1HP, 115V, 1PH, 60HZ)
4. TOP OF LIFT STATION TO MATCH PROPOSED SCRUBBER PAD ELEVATION

RECORD DRAWING

NOTE:
THIS RECORD DRAWING IS A COMPILED REPRESENTATION OF THE CONSTRUCTION PROJECT. THE RECORD DRAWING INFORMATION CONTAINED ON THIS DRAWING WAS OBTAINED FROM YOUNGQUIST BROTHERS, INC, BURDETTE & ASSOCIATES, INC., FLORIDA DESIGN CONTRACTORS AND MORGAN & ASSOCIATES. IT IS BELIEVED TO BE CORRECT TO THE BEST OF THE ENGINEER'S KNOWLEDGE, BUT ACCURACY OF THE INFORMATION CANNOT BE GUARANTEED. TEXT / DIMENSIONS SHOWN IN THIS STYLE FONT REPRESENTS RECORD DRAWING INFORMATION

Path\Name: G:\AProjects\WR\WF PROJECTS\083000-VBCH STORAGE RES IW PMP STATION\CADD\A1-PERMIT\RECORD DWG SET ST JOHNS\SHT 5-6.dwg
Plot Date\Time: 9/19/2011 9:08 AM Current Plotsyle: ACS-Mono-Imperial-CTB.ctbPage Set Up Name: ----
Acad Version: 2006
User Name: Steffer, Tony
© 2008 ARCADIS U.S., INC.

REV.	ISSUED DATE	DESCRIPTION
1	11/29/10	ADDED RECORD DRAWING INFO.

KEYPLAN | SEAL | SEAL

ARCADIS

ARCADIS U.S., INC.
2081 Vista Parkway
West Palm Beach, Florida 33411
Tel: 561-697-7000, Fax: 561-697-7194
www.arcadis-us.com
Certificate No. EB00007917

CITY OF VERO BEACH
WATER TREATMENT PLANT
R.O. EXPANSION
IW 1

PROJECT MANAGER	DEPARTMENT MANAGER	LEAD DESIGN PROF.	CHECKED BY
W. REESE	T. JENSEN	B. KOUGH	
SHEET TITLE		TASK/PHASE NUMBER	DRAWN BY
DRAINAGE PUMP STATION & SURGE TANK DETAILS		00001/0000	T. STEFFER
		PROJECT NUMBER	DRAWING NUMBER
		WF083000	6 of 6